Z890 GAMING PLUS WIFI

Motherboard

User Guide

Contents

Quick Start 4

Specifications 16

Special Features 21

Package Contents 22

Back Panel Connectors 23

- LAN Port LED Status Table 25
- Audio Jacks Connection 25
- Installing Antenna 27

Overview of Components 28

- CPU Socket 29
- DDR5 DIMM Slots 31
- PCI_E1~4: PCIe Expansion Slots 33
- M2_1~4: M.2 Slots (Key M) 34
- SATA1~4: SATA 6Gb/s Connectors 41
- JAUD1: Front Audio Connector 41
- JFP1, JFP2: Front Panel Connectors 42
- JTBT5_1: Thunderbolt™ 5 Expansion Card Connector 42
- JDASH1 : Tuning Controller connector 43
- JTPM1: TPM Module Connector 43
- CPU_PWR1~2, ATX_PWR1, PCIE_PWR1: Power Connectors 44
- JCI1: Chassis Intrusion Connector 45
- JUSBC1: USB 20Gbps Type-C Front Panel Connectors 46
- JUSB3~4: USB 5Gbps Connectors 46
- JUSB1~2: USB 2.0 Connectors 47
- JBAT1: Clear CMOS (Reset BIOS) Jumper 47
- CPU_FAN1, PUMP_SYS1, SYS_FAN1~5: Fan Connectors 48
- JRGB1: RGB LED connector 49
- JARGB_V2_1~3: A-RAINBOW V2 (ARGB Gen2) LED connectors 50
- JAF_1: EZ Conn-Header V1 51

Onboard LEDs 52

- EZ Debug LED 52

Installing OS, Drivers & MSI Center.....53
Installing Drivers with MSI Driver Utility Installer..... 54
MSI Center User Guide..... 56
UEFI BIOS.....57
BIOS Setup 58
Entering BIOS Setup 59
Resetting BIOS 60
Updating BIOS 60

Quick Start

This Quick Start provides clear diagrams to help you install the motherboard. Video demonstrations are also available for some installations. Visit these videos by clicking the provided URL on your phone or tablet' s web browser. Alternatively, you can scan the QR code to access the video directly.

Preparing Tools and Components

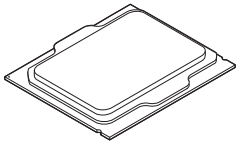

Intel® LGA1851 CPU

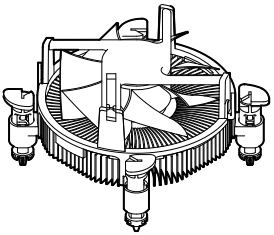

LGA1851 CPU Fan

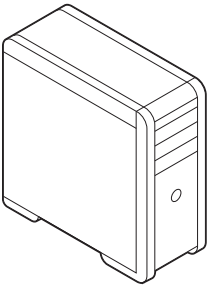

Chassis

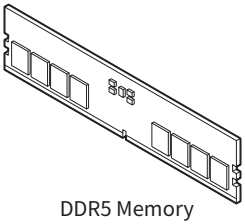

DDR5 Memory

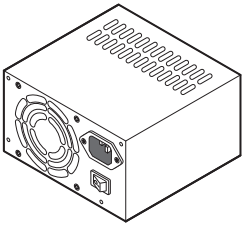

Power Supply Unit

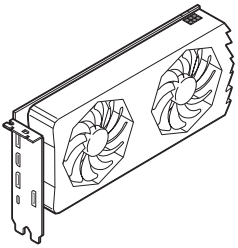

Graphics Card

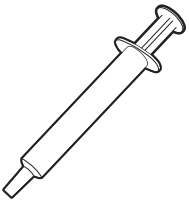

Thermal Paste

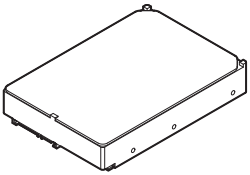

SATA Hard Disk Drive

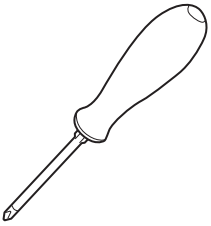

Phillips Screwdriver

A Package of Screws

Safety Information

- The components included in this package are prone to damage from electrostatic discharge (ESD). Please adhere to the following instructions to ensure successful computer assembly.
- Ensure that all components are securely connected. Loose connections may cause the computer to not recognize a component or fail to start.
- Hold the motherboard by the edges to avoid touching sensitive components.
- It is recommended to wear an electrostatic discharge (ESD) wrist strap when handling the motherboard to prevent electrostatic damage. If an ESD wrist strap is not available, discharge yourself of static electricity by touching another metal object before handling the motherboard.
- Store the motherboard in an electrostatic shielding container or on an anti-static pad whenever the motherboard is not installed.
- Before turning on the computer, ensure that there are no loose screws or metal components on the motherboard or anywhere within the computer case.
- Do not boot the computer before installation is completed. This could cause permanent damage to the components as well as injury to the user.
- If you need help during any installation step, please consult a certified computer technician.
- Always turn off the power supply and unplug the power cord from the power outlet before installing or removing any computer component.
- Keep this user guide for future reference.
- Keep this motherboard away from humidity.
- Make sure that your electrical outlet provides the same voltage as is indicated on the PSU, before connecting the PSU to the electrical outlet.
- Place the power cord such a way that people can not step on it. Do not place anything over the power cord.
- All cautions and warnings on the motherboard should be noted.
- If any of the following situations arises, get the motherboard checked by service personnel:
  - Liquid has penetrated into the computer.
  - The motherboard has been exposed to moisture.
  - The motherboard does not work well or you can not get it work according to user guide.
  - The motherboard has been dropped and damaged.
  - The motherboard has obvious sign of breakage.
- Do not leave this motherboard in an environment above 60°C (140°F), it may damage the motherboard.

Case stand-off notification

To prevent damage to the motherboard, any unnecessary mounting stand-off between the motherboard circuits and the computer case is prohibited. The Case standoff keep out zone signs will be marked on the backside of motherboard (as shown below) to serve as a warning to user.

Avoid collision notification

Protective paint is printed around each screw hole to prevent parts from being scratched.

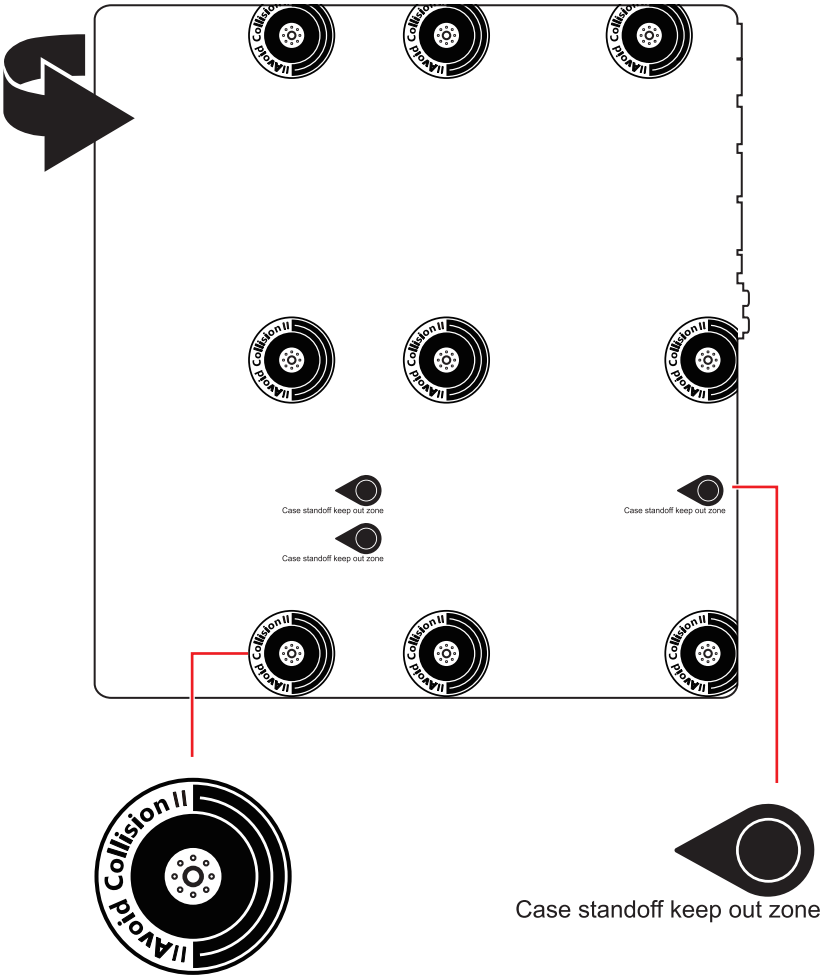

* The illustration above is for reference only and may vary from the motherboard you purchased.

Installing a Processor

- https://msi.gm/S52C77C2

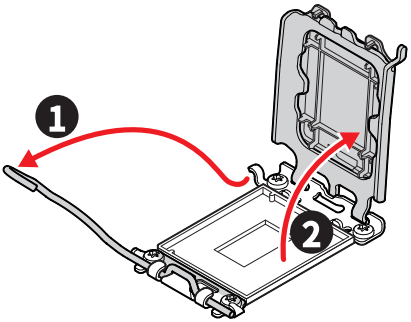

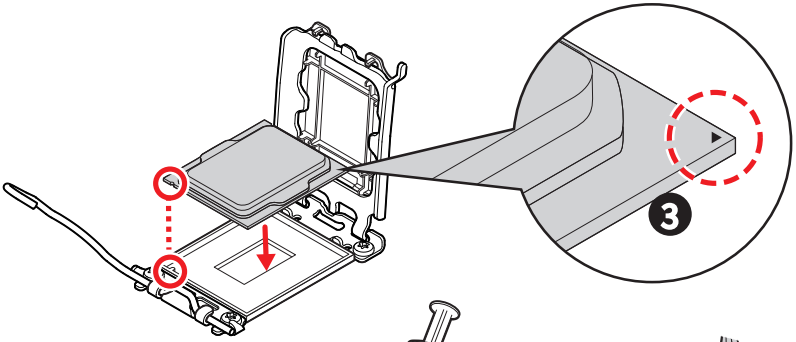

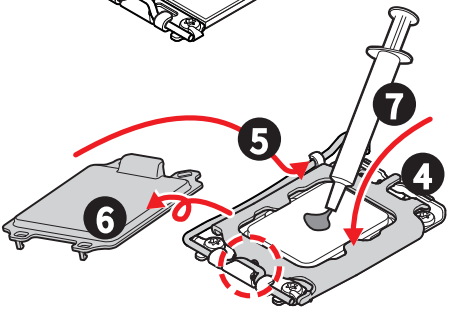

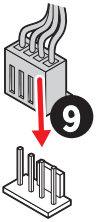

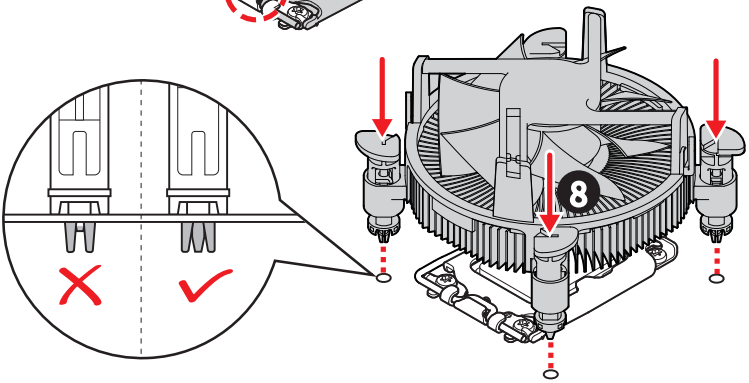

Installing DDR5 memory

- https://msi.gm/S647FF99

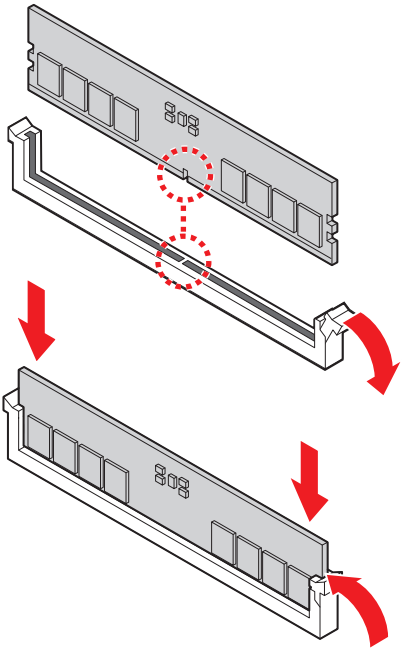

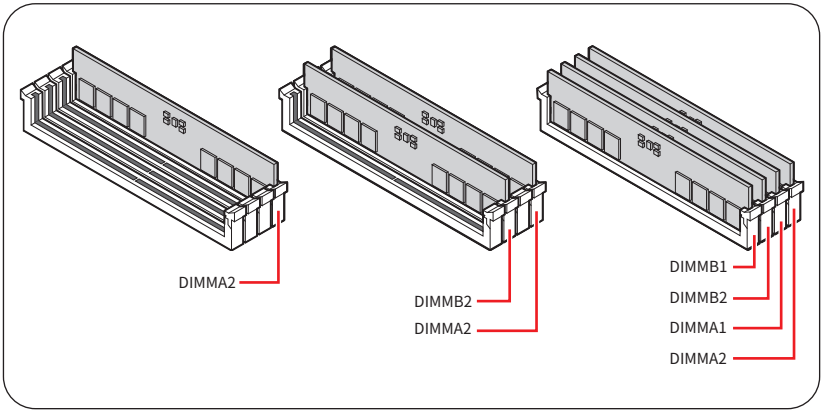

Connecting the Front Panel Header

- https://msi.gm/S8EF7577

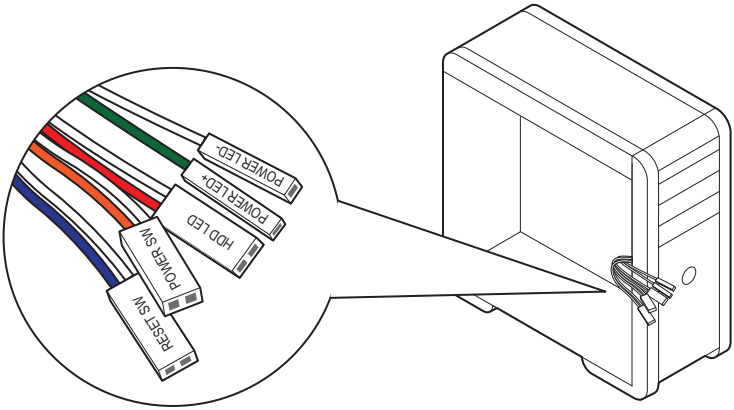

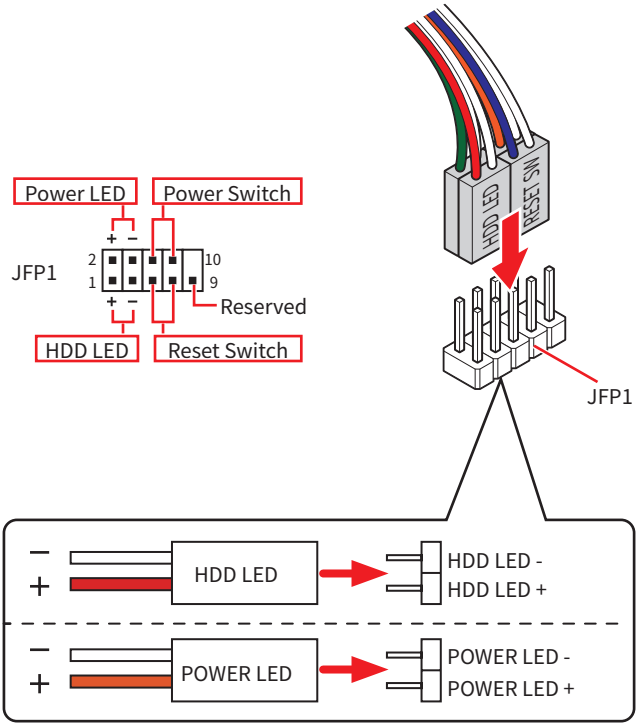

Installing the Motherboard

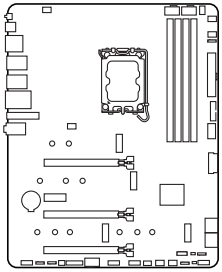

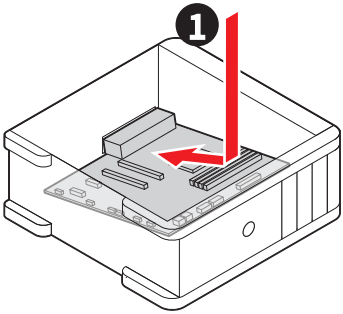

- https://msi.gm/S4BA9046

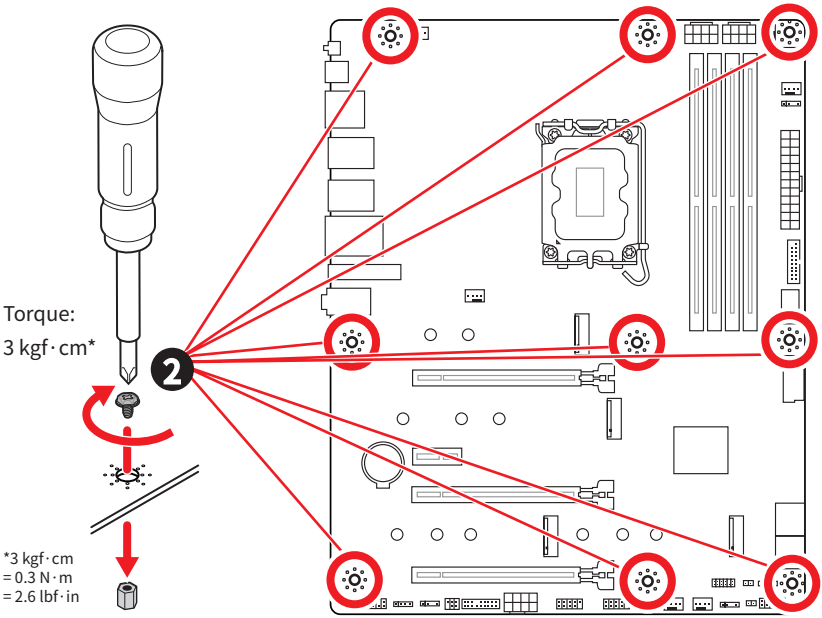

Connecting the Power Connectors

- https://msi.gm/SD937E2C

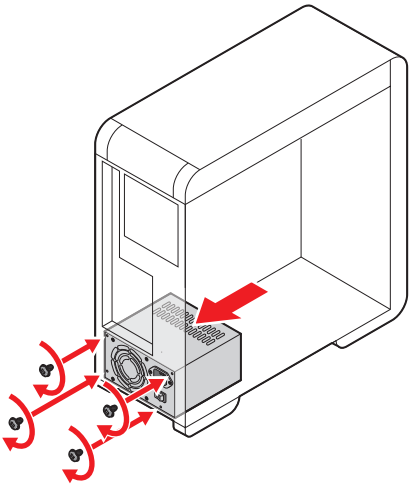

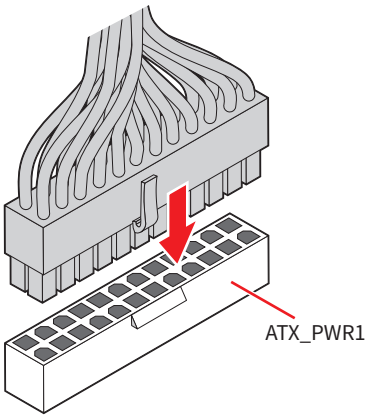

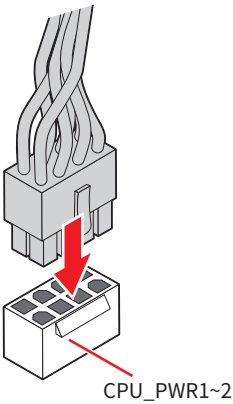

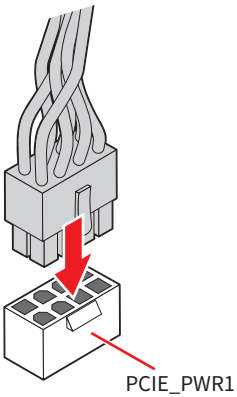

Installing SATA Drives

- https://msi.gm/S9369131

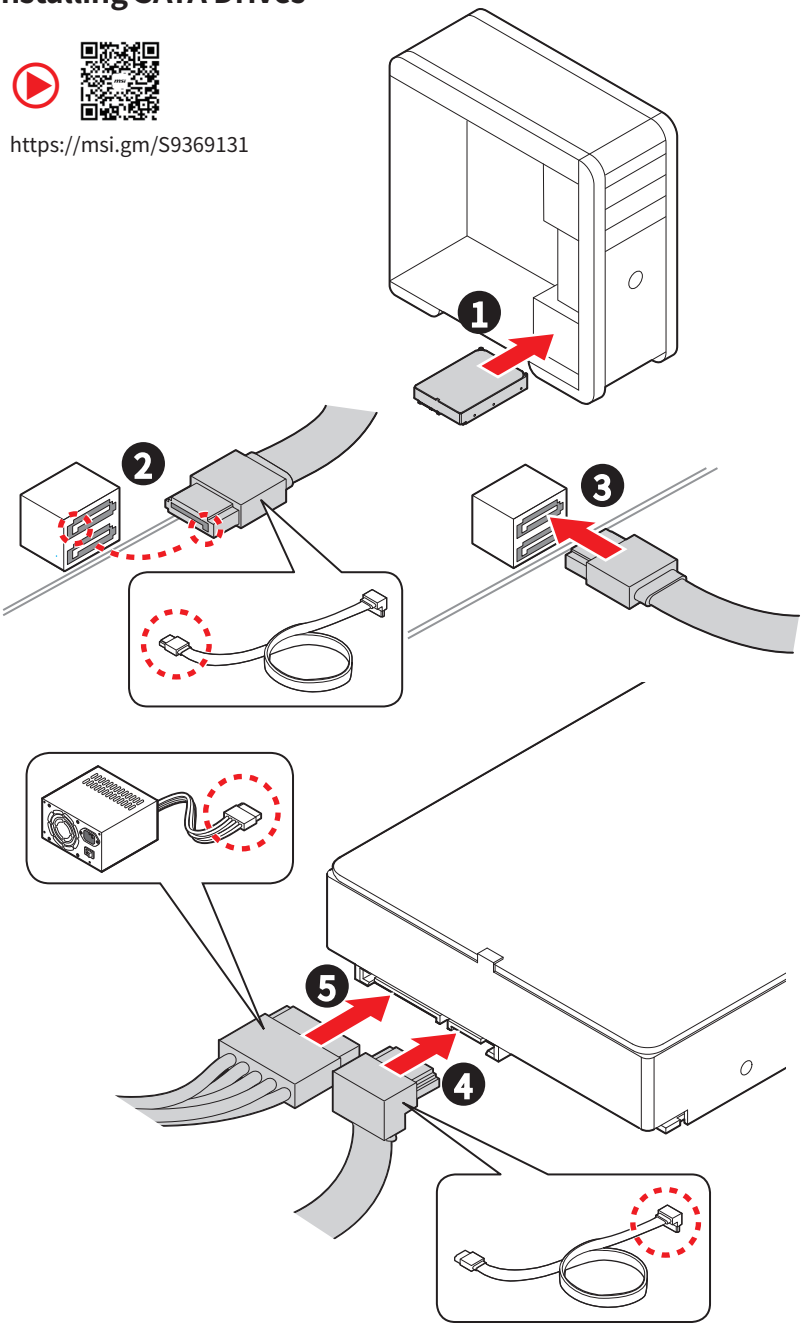

Installing a Graphics Card

- https://msi.gm/SBC41FF1

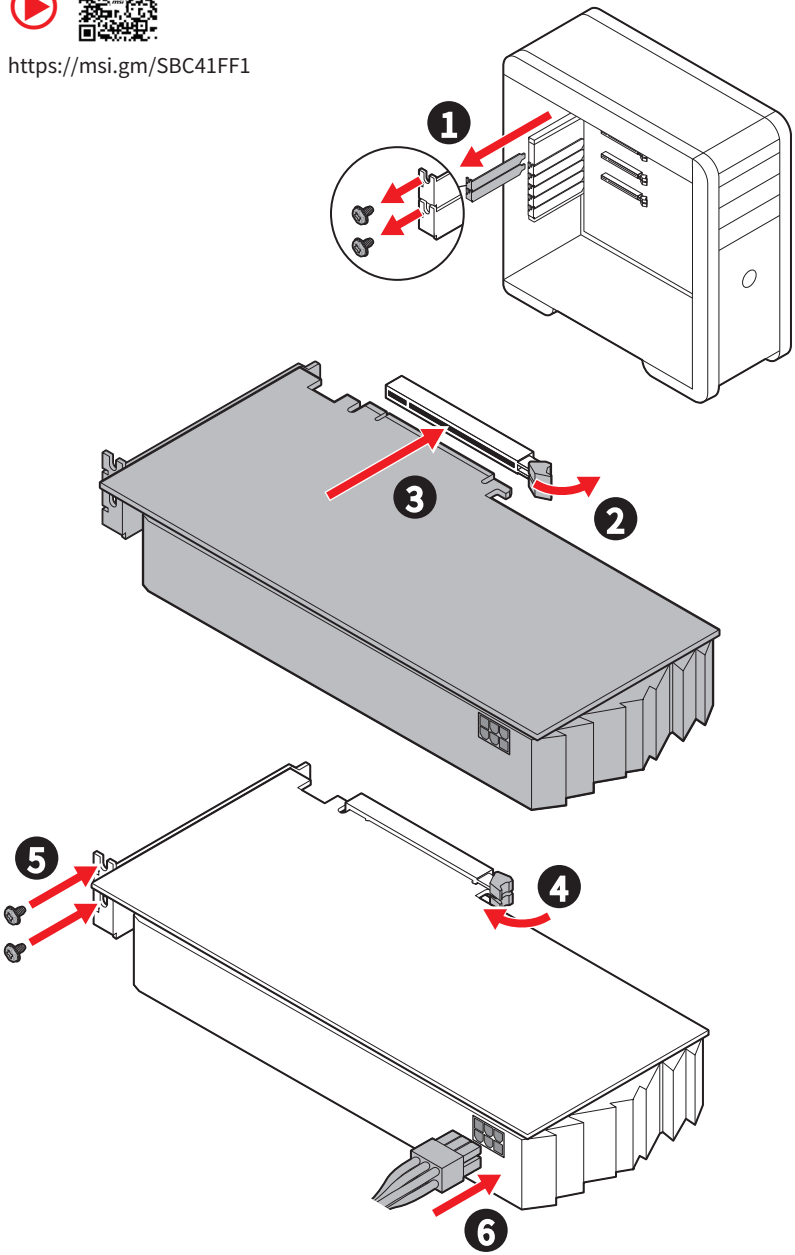

Connecting Peripheral Devices

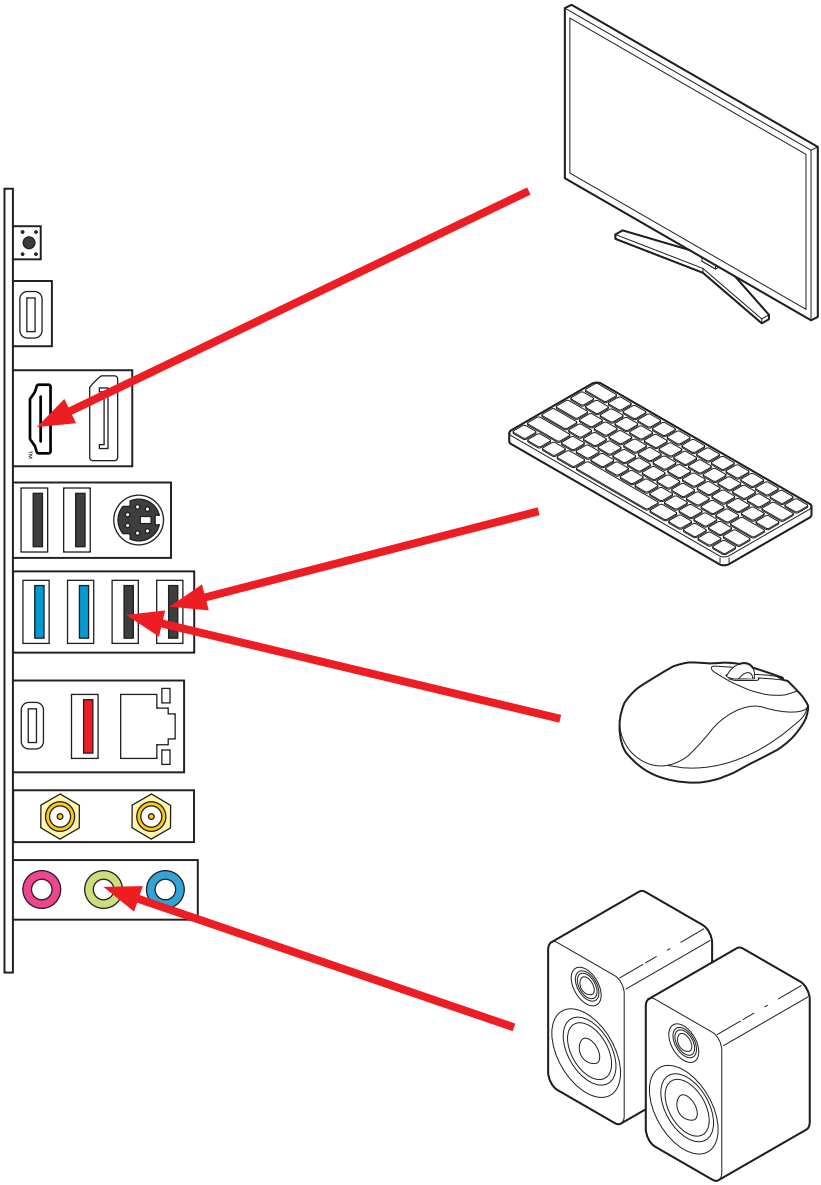

Power On

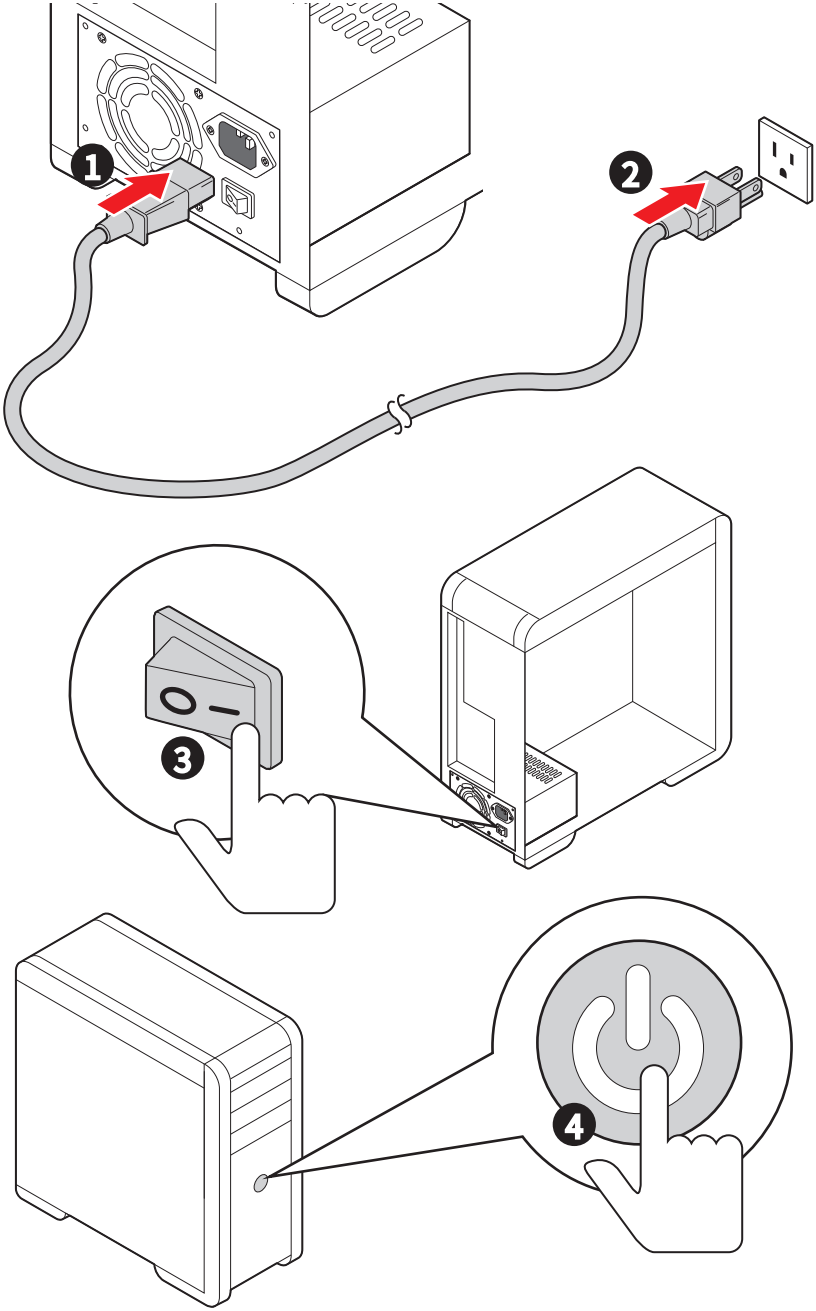

Specifications

CPU	• Supports Intel® Core™ Ultra Processors (Series 2)* • Processor socket LGA1851 * Please go to www.msi.com to get the newest support status as new processors are released.
Chipset	Intel® Z890 Chipset
Memory	• 4x DDR5 memory slots*, supporting up to 256GB** • Supports Intel® POR Speed and JEDEC Speed • Supports Memory Overclocking and Intel® XMP 3.0 • Supports Dual-Controller Dual-Channel mode • Supports Non-ECC, Un-buffered memory • Supports CUDIMM * The DIMM slots on this motherboard only have single-sided latches. ** Memory compatibility and supported speeds can vary depending on the CPU and memory configuration. For detailed information, please refer to the Memory Compatibility List available on the product' s Support page or visit https://www.msi.com/support/.

Expansion Slots	• 3x PCIe x16 slots
	  • PCI_E1 slot supports up to PCIe 5.0 x16 (From CPU)
	  • Supports BIOS adjustment to x8+x8 or x8+x4+x4
	  • PCI_E3 slot supports up to PCIe 4.0 x4 (From Z890 Chipset)
	  • PCI_E4 slot supports up to PCIe 4.0 x4 (From Z890 Chipset)
	• 1x PCIe x1 slot
	  • PCI_E2 slot supports up to PCIe 4.0 x1 (From Z890 Chipset)

Onboard Graphics	• 1 x DisplayPort 1.4 with HBR2 port, supporting a maximum resolution of 4K 60Hz*/ ** • 1x HDMI™ 2.1 port, supporting a maximum resolution of 4K 60Hz*/ ** • 1 x Thunderbolt™ 4 port supporting DisplayPort 2.1 over USB Type-C®, with a maximum resolution of 4K 120Hz/ 8K 60Hz*/ ** * Available only on processors featuring integrated graphics. ** Graphics specifications may vary depending on the CPU installed.
SATA Ports	• 4x SATA 6Gb/s ports (From Z890 chipset)

Continued on next column

Continued from previous column

M.2 SSD Slots	• 4x M.2 slots (Key M)
	  • M2_1 slot (From CPU)
	  • Supports up to PCIe 5.0 x4
	  • Supports 2260/ 2280 storage devices
	  • M2_2 slot (From CPU)
	  • Supports up to PCIe 4.0 x4
	  • Supports 2260/ 2280/ 22110 storage devices
	  • M2_3 slot (From Z890 chipset)
	  • Supports up to PCIe 4.0 x4
	  • Supports 2242/ 2260/ 2280 storage devices
	  • M2_4 slot (From Z890 chipset)
	  • Supports up to PCIe 4.0 x4
	  • Supports up to SATA 6Gb/s
	  • Supports 2242/ 2260/ 2280 storage devices

RAID	• Supports RAID 0, RAID 1, RAID 5 and RAID 10 for SATA storage devices • Supports RAID 0, RAID 1, RAID 5 and RAID 10 for M.2 NVMe storage devices
Audio	• Realtek® ALC897 Codec • 7.1-Channel High Definition Audio
LAN	1x Intel® Killer E5000B 5Gbps LAN controller
Wi-Fi & Bluetooth®	Wi-Fi 7 • The Wireless module is pre-installed in the M.2 (Key-E)slot • Supports MU-MIMO TX/RX, 2.4GHz/ 5GHz/ 6GHz* (320MHz) up to 5.8Gbps • Supports 802.11 a/ b/ g/ n/ ac/ ax/ be • Supports Bluetooth® 5.4**, MLO, 4KQAM * 6GHz band support may depend on every country' s regulations and Wi-Fi 7 will be ready in Windows 11 version 24H2. ** The Bluetooth version may be updated, please refer to the Wi-Fi chipset vendor' s website for details. Bluetooth 5.4 will be ready in Windows 11 version 24H2.
Power Connectors	• 1x 24-pin ATX main power connector • 2x 8-pin +12V power connectors • 1x 8-pin PCIe power connector

Continued on next column

Continued from previous column

Internal USB Connectors	• 1x USB 20Gbps Type-C front panel port (From Z890 chipset)
	• 2x USB 5Gbps connectors (From Z890 chipset)
	  • Supports additional 4 USB 5Gbps ports
	• 2x USB 2.0 connectors (From Z890 Chipset & Hub GL850G)
	  • Supports additional 4 USB 2.0 ports

Fan Connectors	• 1x 4-pin CPU fan connector • 1x 4-pin water-pump/ system fan connector • 5x 4-pin system fan connectors
System Connectors	• 1x Front panel audio connector • 2x System panel connectors • 1x Chassis Intrusion connector • 1x TPM module connector • 1x Tuning Controller connector • 1x TBT connector (Supports RTD3) • 1x EZ Conn-Header V1 (JAF_1)
Jumpers	• 1x Clear CMOS jumper
LED Features	• 1x 4-pin RGB LED connector • 3x 3-pin A-RAINBOW V2 (ARGB Gen2) LED connectors • 4x EZ Debug LED

Continued on next column

Continued from previous column

Back Panel Connectors & Others	• 1x Flash BIOS button
	• 1x Thunderbolt™ 4 USB-C port (From CPU)
	  • Supports DisplayPort over USB Type-C®
	  • Each port can daisy-chain up to three Thunderbolt 4 devices or five Thunderbolt 3 devices
	• 1x DisplayPort
	• 1x HDMI™ port
	• 1x PS/2 port
	• 1x 5G LAN (RJ45) port
	• 4x USB 2.0 Type-A ports (From Hub GL850G)
	• 2x USB 5Gbps Type-A ports (From Z890 chipset)
	• 1x USB 10Gbps Type-A port (From Z890 chipset)
	• 1x USB 10Gbps Type-C port (From Z890 chipset)
	• 2x Wi-Fi Antenna connectors
	• 3x Audio jacks

I/O Controller	NUVOTON NCT6687D-M Controller Chip
Hardware Monitor	• CPU/ System/ Chipset temperature detection • CPU/ System/ Pump fan speed detection • CPU/ System/ Pump fan speed control
Form Factor	• ATX Form Factor • 9.6 in. x 12 in. (244 mm x 305 mm)

Continued on next column

Continued from previous column

BIOS Features	• 1x 256 Mb flash • UEFI AMI BIOS • ACPI 6.5, SMBIOS 3.7 • Multi-language
Software	• Drivers • MSI Center • Intel® Extreme Tuning Utility • CPU-Z MSI GAMING • Dropbox • Norton 360 • AIDA64 Extreme - MSI Edition • Adobe Creative Cloud • Acrobat • Intel® Killer Networking

Special Features

MSI Center

- MSI AI Engine
- Mystic light
- Ambient Link
- Frozr AI Cooling
- User Scenario
- Cooling Wizard
- True Color
- MSI Companion
- System Diagnosis
- Live Update
- Hardware Monitoring
- System Info
- Microsoft App
- My Device

EZ DIY

- EZ M.2 Sheild Frozr II
- EZ M.2 Clip II
- EZ PCIe Clip II
- Flash BIOS Button
- Pre-installed I/O Shield
- EZ Antenna
- EZ Conn-Design
- EZ LED
- EZ LED Control

Thermal Features

- Extended Heatsink Design
- M.2 Shield Frozr
- MOSFET thermal pad / Extra choke pad
- Fan headers (CPU + Combo + SYSTEM)

Performance

- Core Boost
- VRM Power Design (VCPU / VGT / VCCSA / VNNAON)
- Dual CPU Power
- Memory Boost
- Lightning Gen 5 PCI-E Slot / M.2
- Lightning Gen 4 PCI-E Slot / M.2
- Front USB Type-C
- Supplemental PCIe Power Connector
- Server Grade PCB
- 2oz Copper thickened PCB

Audio

- Audio Boost

RGB Support

- Mystic Light Extension (RGB)
- Mystic Light Extension (ARGB V2)
- Ambient Devices Support

BIOS

- Click BIOS X
- AI Boost
- Performance Preset

Package Contents

Please check the contents of your motherboard package. It should contain:

Board

- 1x Motherboard

Documentation

- 1x Quick installation guide
- 1x European Union Regulatory Notices

Cables

- 2x SATA cables
- 1x 1 to 2 EZ Conn-Cable (V1)

Accessories

- 1x EZ Wi-Fi Antenna
- 4x EZ M.2 Clip II
- 1x EZ M.2 Clip II Remover

Important

If any of the above items are damaged or missing, please contact your retailer.

Back Panel Connectors

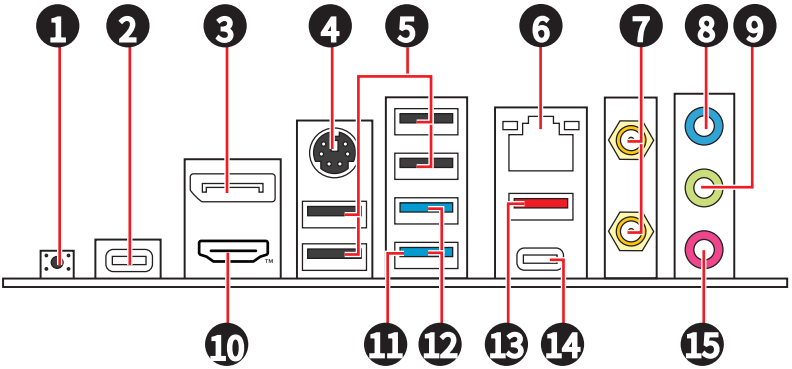

Item	Description
1	Flash BIOS button - Please refer to page 61 for details about updating BIOS with Flash BIOS button.
2	Thunderbolt™ 4 USB-C port (From CPU) • Supports DisplayPort over USB Type-C® • Each port can daisy-chain up to three Thunderbolt 4 devices or five Thunderbolt 3 devices
3	DisplayPort
4	PS/2 port
5	USB 2.0 Type-A ports (From Hub GL850G)
6	5Gbps LAN (RJ45) jack
7	Wi-Fi antenna connectors
8	Line-in port

Item	Description
9	Line-out port
10	HDMI™ port HDMI™ HIGH-DEFINITION MULTIMEDIA INTERFACE
11	Flash BIOS port
12	USB 5Gbps Type-A ports (From Z890 chipset)
13	USB 10Gbps Type-A port (From Z890 chipset)
14	USB 10Gbps Type-C port (From Z890 chipset)
15	Mic-in port

LAN Port LED Status Table

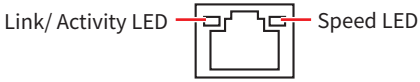

Link/ Activity LED		Speed LED	
Status	**Description**	**Status**	**Speed**
Off	No link	Off	10 Mbps
Yellow blinking slowly	Linked	Green	100 Mbps/ 1 Gbps/ 2.5 Gbps
Yellow blinking rapidly	Data activity	Orange	5 Gbps

Audio Jacks Connection

Audio jacks to headphone and microphone diagram

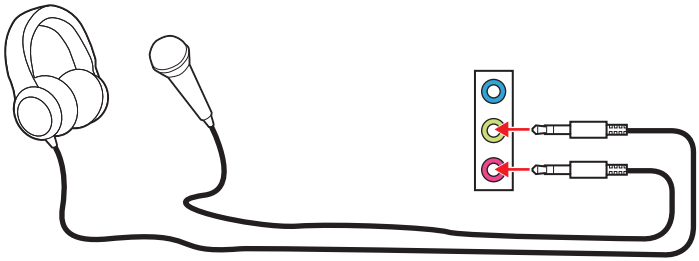

Audio jacks to stereo speakers diagram

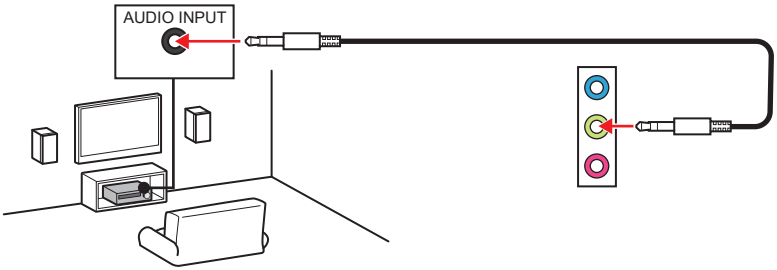

Audio jacks to 4-channel speakers diagram

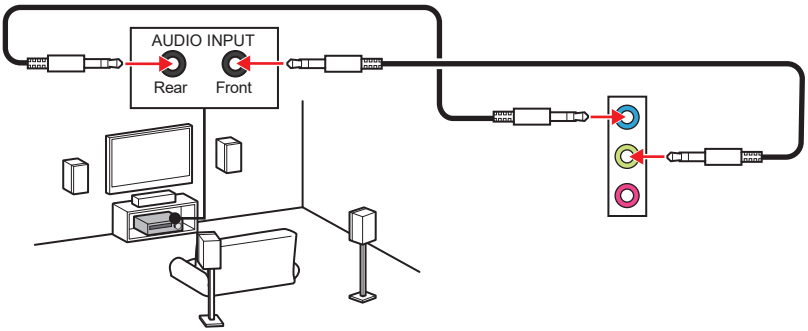

Audio jacks to 5.1-channel speakers diagram

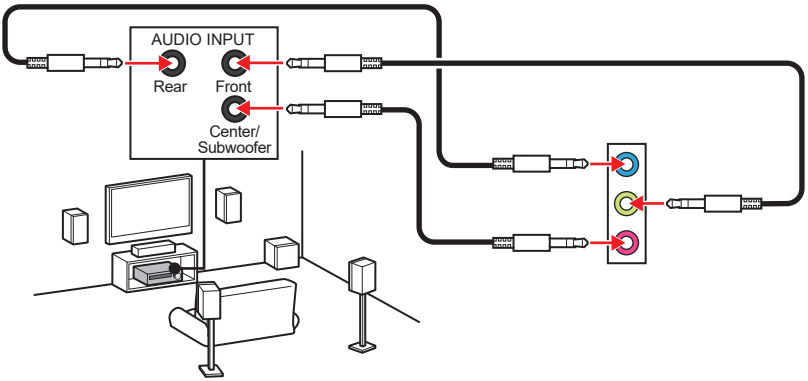

Audio jacks to 7.1-channel speakers diagram

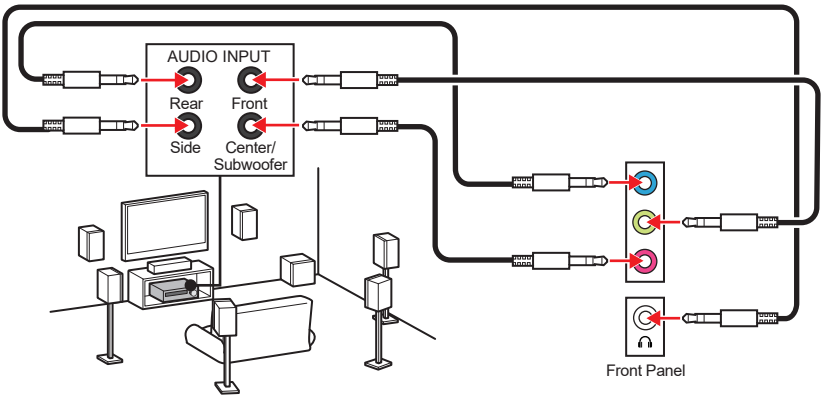

Installing Antenna

1. Connect two antenna cables tight to the Wi-Fi antenna connectors as shown.

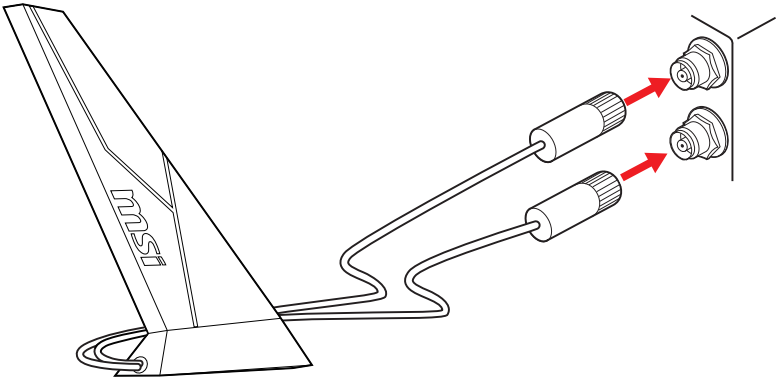

2. Place the antenna as high as possible for a better signal.

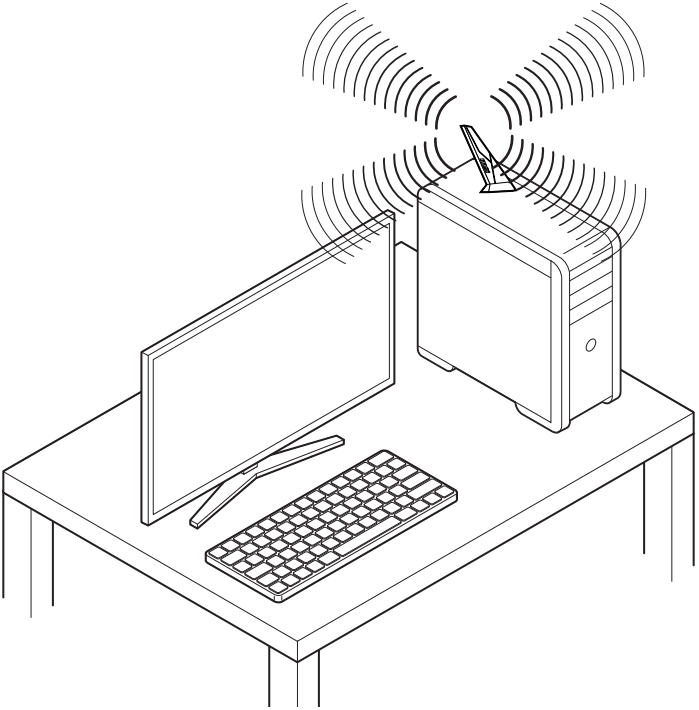

Overview of Components

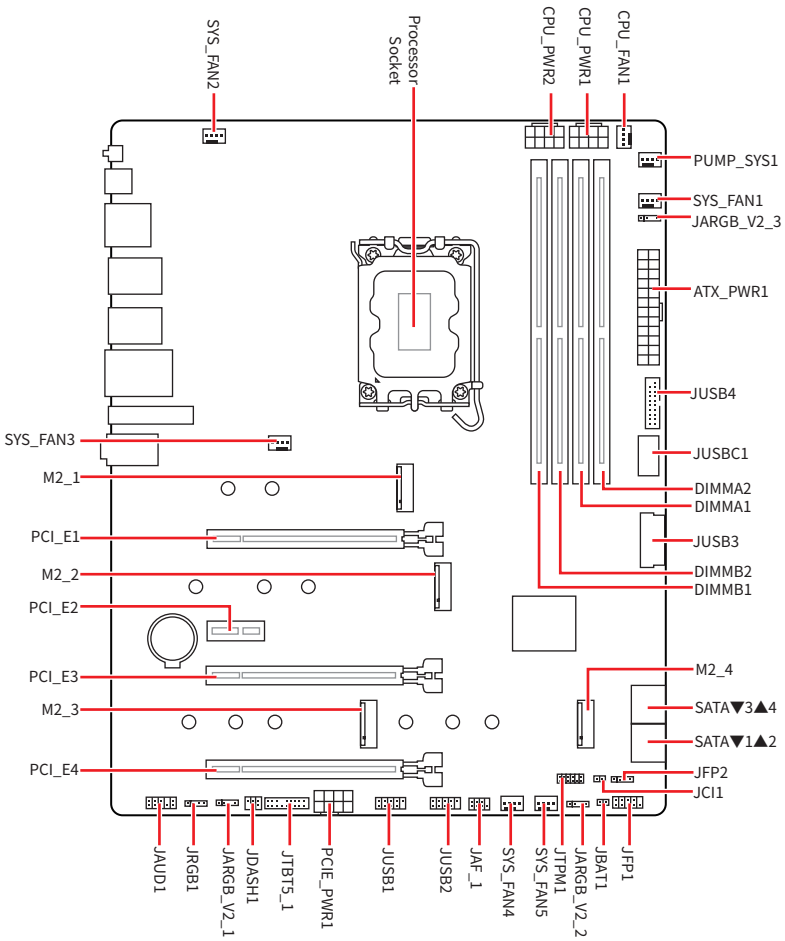

CPU Socket

The LGA1851 socket is the CPU socket that is designed for Intel® desktop processors. It is a land grid array (LGA) socket with 1851 pins. The socket is not compatible with previous generations of Intel® processors.

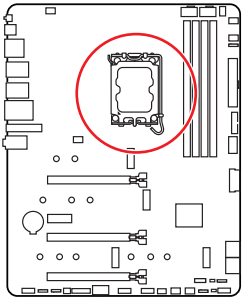

Installing the CPU to the LGA1851 socket

The surface of the LGA1851 CPU has **two notches** to assist in correctly lining up the CPU for motherboard placement. The golden triangle is the Pin 1 indicator.

To install the CPU, align the two notches on the LGA1851 socket with the two corresponding notches on the CPU.

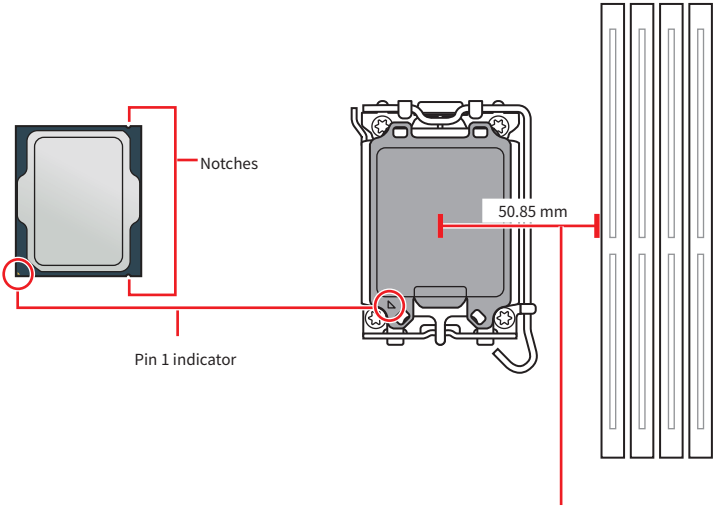

Distance from the center of the CPU socket to the nearest DIMM slot.

Important

- *Please note that LGA1851 and LGA1700 sockets have different physical configurations and pin layouts. Before installation, ensure your CPU is compatible with the LGA1851 socket. Incorrect installation may damage the CPU, socket, and motherboard. DO NOT install a CPU designed for LGA1155, LGA1156, LGA1151, LGA1200, and LGA1700 sockets on the LGA1851 socket.*
- *Please ensure that the motherboard and power supply are turned off and always disconnect the power cord from the power outlet before installing or removing the CPU.*
- *Please retain the CPU protective cap after installing the processor. MSI will deal with Return Merchandise Authorization (RMA) requests if only the motherboard comes with the protective cap on the CPU socket.*
- *Whenever the CPU is not installed, always protect the CPU socket pins by covering the socket with the protective cap.*
- *The CPU should only fit in one orientation, so do not force it. Gently place the CPU into the socket without applying excessive pressure.*
- *Please handle the CPU by the edges only; avoid touching the pins or the surface of the CPU. Any damage to the pins can result in a malfunctioning CPU.*
- *When installing a CPU, always remember to install a CPU heatsink. A CPU heatsink is necessary to prevent overheating and maintain system stability.*
- *Please install the CPU cooler according to the manufacturer' s instructions. Make sure it is securely a tight seal with the CPU and attached to the motherboard to ensure proper heat dissipation.*
- *Overheating can seriously damage the CPU and motherboard. Always make sure the cooling fans work properly to protect the CPU from overheating. Be sure to apply an even layer of thermal paste (or thermal tape) between the CPU and the heatsink to enhance heat dissipation.*
- *This motherboard is designed to support overclocking. Before attempting to overclock, please make sure that all other system components can tolerate overclocking. Any attempt to operate beyond product specifications is not recommended. MSI® does not guarantee the damages or risks caused by inadequate operation beyond product specifications.*

DDR5 DIMM Slots

The DDR5 DIMM slot is a dedicated connector designed to accommodate DDR5 (Double Data Rate 5) memory modules. It represents the latest standard in computer memory, providing enhanced data transfer speeds and efficiency.

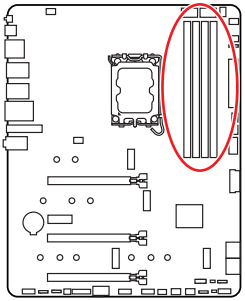

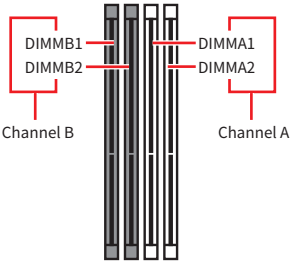

Memory module installation recommendation

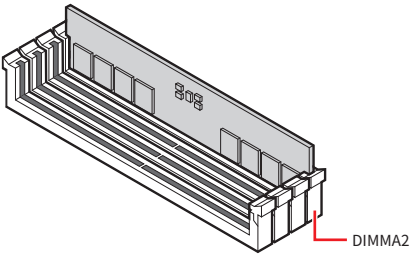

Important

*Always insert memory modules in the **DIMMA2** slot first.*

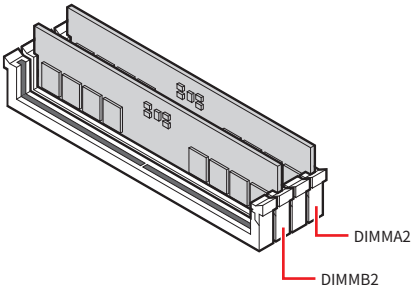

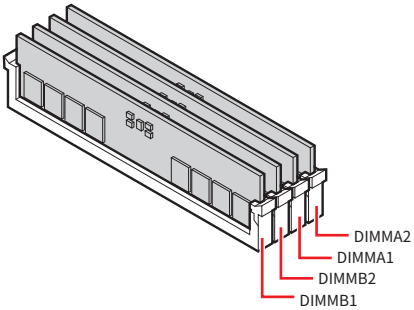

Important

- *The DIMM slots on this motherboard only have a single latch. Please be careful when installing or removing memory modules to avoid damaging the slots.*
- *Align the notch on the DDR5 module with the notch on the memory slot to ensure proper orientation. Do not force the module into the slot; it should slide in easily if properly aligned.*
- *To ensure system stability for Dual channel mode, memory modules must be of the same type, number and density.*
- *Some memory modules may operate at a lower frequency than the marked value when overclocking due to the memory frequency operates dependent on its Serial Presence Detect (SPD). Go to BIOS and find the **DRAM Speed** to set the memory frequency if you want to operate the memory at the marked or at a higher frequency.*
- *It is recommended to use a more efficient memory cooling system for full DIMMs installation or overclocking.*
- *The stability and compatibility of installed memory module depend on installed CPU and devices when overclocking.*
- *Please refer to www.msi.com for more information on compatible memory.*

PCI_E1~4: PCIe Expansion Slots

PCI Express (PCIe) expansion slots are used to connect add-on cards to the motherboard. These cards can provide additional functionality to your computer, such as graphics, networking, or storage.

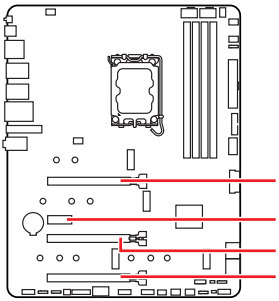

PCI_E1: PCIe 5.0 x16 (From CPU)

PCI_E2: PCIe 4.0 x1 (From Z890 Chipset)

PCI_E3: PCIe 4.0 x4 (From Z890 Chipset)

PCI_E4: PCIe 4.0 x4 (From Z890 Chipset)

Important

- *If you install a large and heavy graphics card, you need to use a tool such as **MSI Graphics Card Bolster** to support its weight to prevent deformation of the slot.*
- *For a single PCIe x16 expansion card installation with optimum performance, using the **PCI_E1** slot is recommended.*
- *When adding or removing expansion cards, always turn off the power supply and unplug the power supply power cable from the power outlet. Read the expansion card' s documentation to check for any necessary additional hardware or software changes.*

M2_1~4: M.2 Slots (Key M)

The M.2 slot is a small, high-speed expansion slot on a motherboard. It can be used to connect an M.2 SSD, which is a type of solid-state drive that offers faster performance than traditional SATA SSDs.

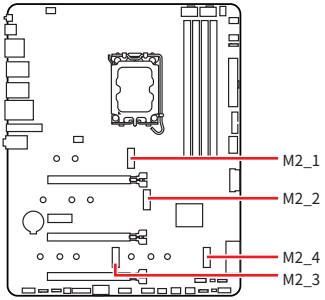

Watch the video to learn how to Install M.2 SSD with Screwless M.2 Shield Frozr heatsink.

- https://msi.gm/S7F5D000

Important

- *Intel® RST only supports PCIe M.2 SSD with UEFI ROM.*
- *If your M.2 SSD equips its own heatsink, please note the following:*
  - *Remove the M.2 plate or rubber cube in the M.2 slot before installing M.2 SSD. Do not re-install the heatsink supplied with the motherboard.*
  - *Ensure that the M.2 SSD heatsink you use fits the size limits to prevent damage.*

M.2 SSD Heatsink Size Restrictions

If you need to purchase an additional heatsink, please refer to the diagram below to confirm the M.2 installation space dimensions. Please also consider the height of the installed PCIe expansion card when determining M.2 installation space.

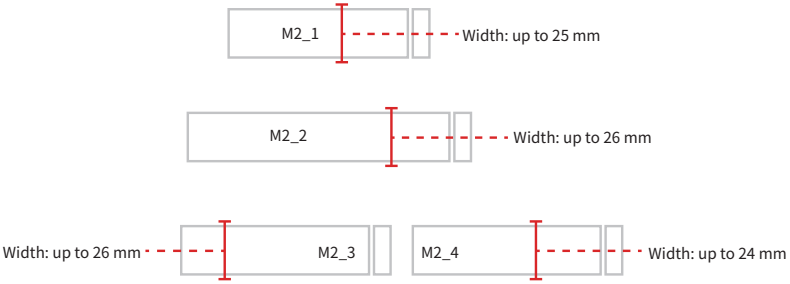

Installing M.2 module into M2_1 slot

1. Press and hold the end button of Screwless M.2 Shield Frozr heatsink.

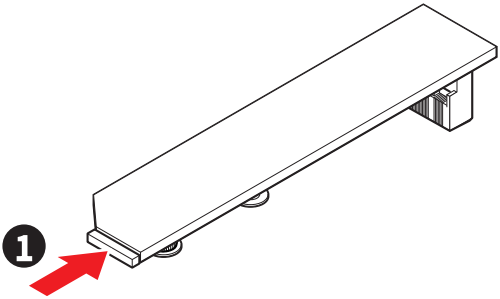

2. Slightly lift up the end part of Screwless M.2 Shield Frozr heatsink and move it forward to uninstall the heatsink.

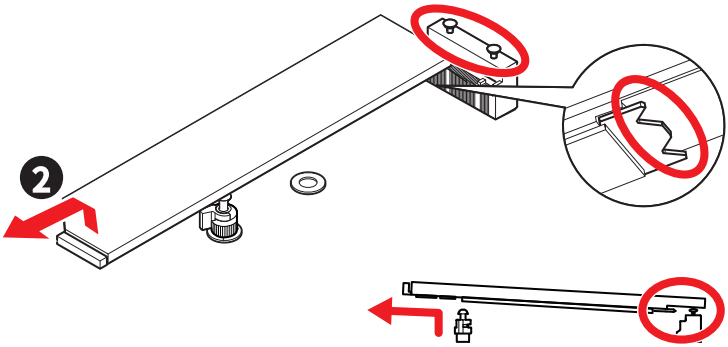

3. If you install 2260 SSD, use the included **EZ M.2 Clip II Remover**. Place the included **EZ M.2 Clip II** in the screw hole, use the remover to screw it in clockwise and secure it. Skip this step if you install 2280 SSD.

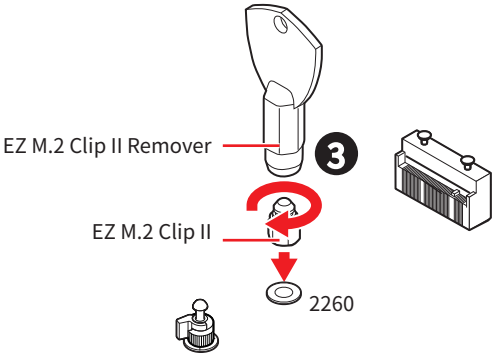

4. Insert your M.2 SSD into the M.2 slot at a 30-degree angle.
5. Rotate the EZ M.2 Clip to secure the M.2 SSD, or use the EZ M.2 Clip II, which automatically locks and secures the SSD.

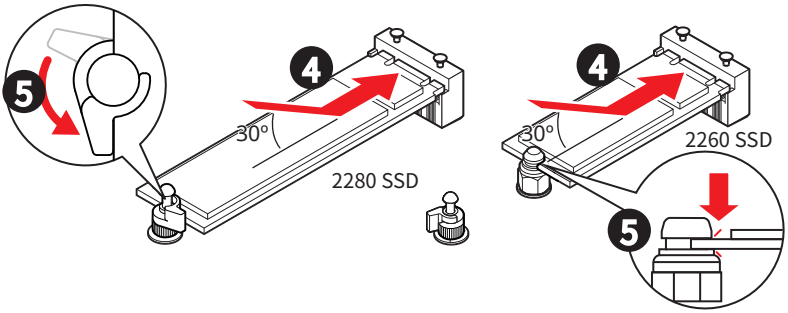

6. Remove the protective films from the thermal pads under Screwless M.2 Shield Frozr heatsink.
7. Align the notches under Screwless M.2 Shield Frozr heatsink with the tenons, and then put the heatsink back in place.
8. Press the end side of Screwless M.2 Shield Frozr heatsink to lock it completely.

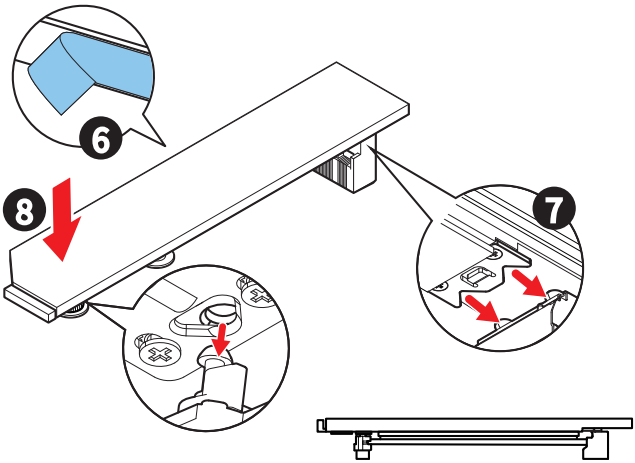

Removing M.2 SSD using the EZ M.2 Clip II

To remove M.2 SSD from the EZ M.2 Clip II, gently push the spring head on the top of the EZ M.2 Clip II outward while simultaneously pulling the M.2 SSD out.

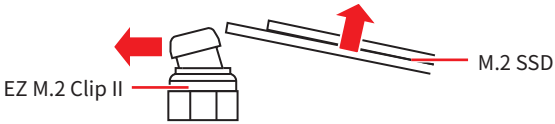

Installing M.2 module into M2_2~M2_4 slots

1. Loosen the screws of M.2 Shield Frozr heatsink.
2. Lift up the M.2 Shield Frozr heatsink and remove it.

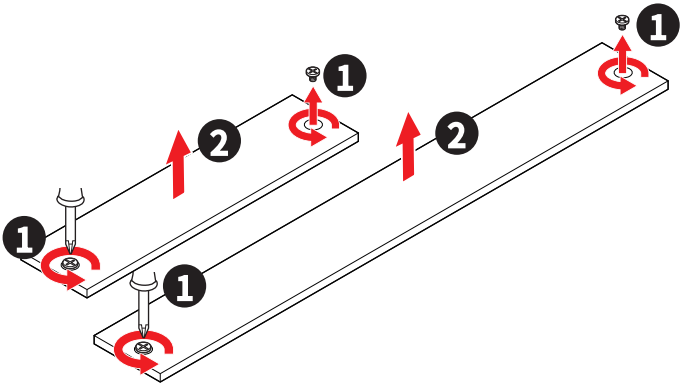

3. Please refer to the following instructions for installation based on the lengths of SSD.

   For M2_2 slot

   If you install 2260 or 2280 SSD, install the included **EZ M.2 Clip II** in the screw hole. Use **EZ M.2 Clip II Remover** to screw **EZ M.2 Clip II** in clockwise and secure it.

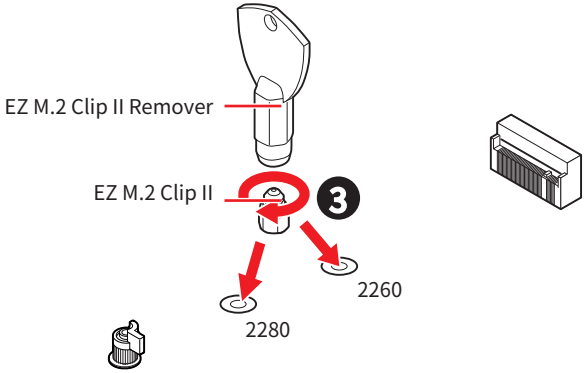

For M2_3 slot

If you install 2242 or 2260 SSD, install the included **EZ M.2 Clip II** in the screw hole. Use **EZ M.2 Clip II Remover** to screw **EZ M.2 Clip II** in clockwise and secure it.

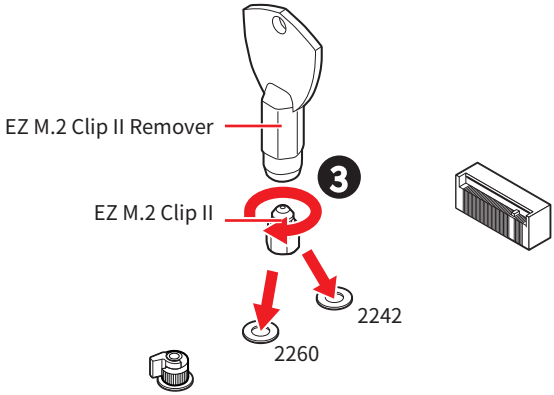

For M2_4 slot

According to the length of your SSD, place the included EZ M.2 Clip II in the screw hole, use the remover to screw it in clockwise and secure it.

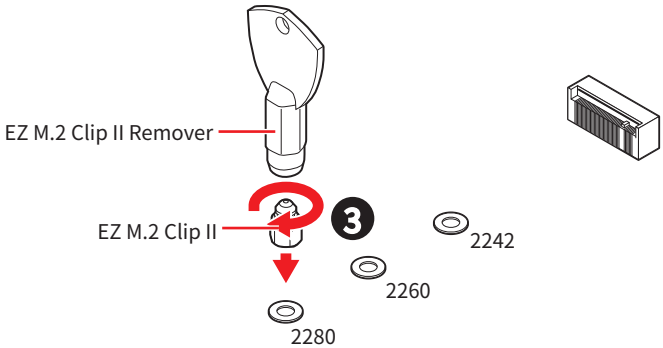

4. Insert your M.2 SSD into the M.2 slot at a 30-degree angle.
5. Rotate the EZ M.2 Clip to secure the M.2 SSD, or use the EZ M.2 Clip II, which automatically locks and secures the SSD.

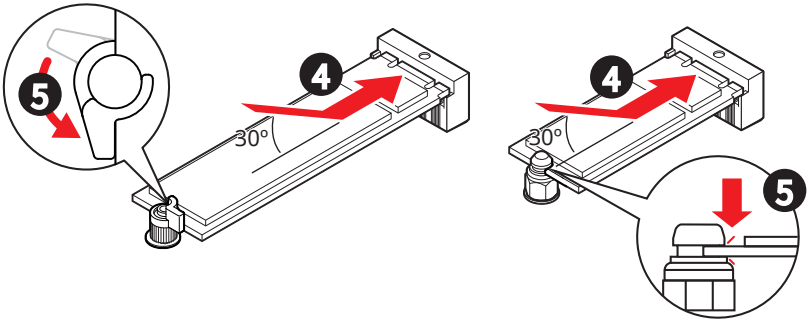

6. Remove the protective film from the thermal pad under the M.2 Shield Frozr heatsink.
7. Put the M.2 Shield Frozr heatsink back in place and secure it.

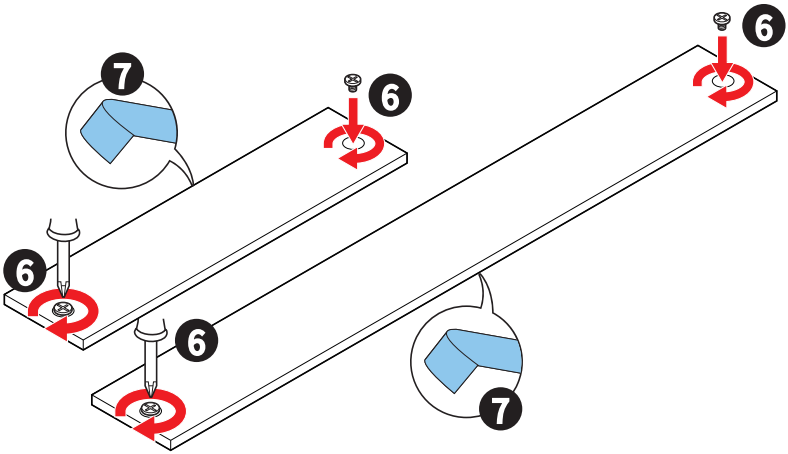

SATA1~4: SATA 6Gb/s Connectors

These connectors are SATA 6Gb/s interface ports. Each connector can connect to one SATA device.

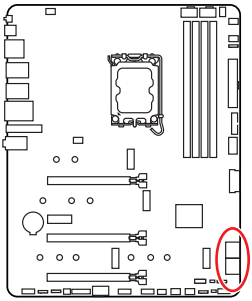

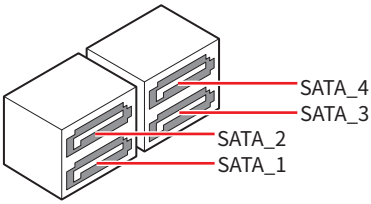

Important

- *Please do not fold the SATA cable at a 90-degree angle. Data loss may result during transmission otherwise.*
- *SATA cables have identical plugs on either sides of the cable. However, it is recommended that the flat connector be connected to the motherboard for space saving purposes.*

JAUD1: Front Audio Connector

This connector allows you to connect audio jacks on the front panel.

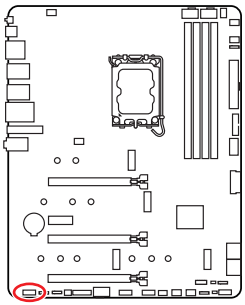

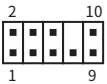

Pin	Signal Name	Pin	Signal Name
1	MIC L	2	Ground
3	MIC R	4	NC
5	Head Phone R	6	MIC Detection
7	SENSE_SEND	8	No Pin
9	Head Phone L	10	Head Phone Detection

JFP1, JFP2: Front Panel Connectors

The JFP1 connector controls the power on, power reset, and the LEDs on your PC case/ chassis. Power Switch/ Reset Switch headers allow you to connect power button/ reset button. Power LED header connects to LED light on the PC case, and HDD LED header indicates the activity of the hard disk. The JFP2 connector is for Buzzer and Speaker. For connecting the cables from your PC case to the correct pins on the motherboard, please refer to the following images.

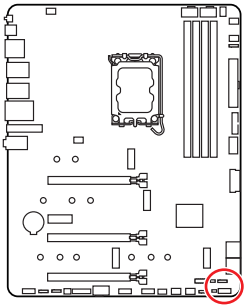

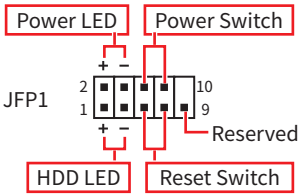

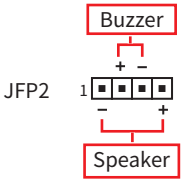

Important

Make sure to connect the Power LED and HDD LED cables to the corresponding positive and negative pins on the motherboard. Otherwise, the LEDs will not function properly.

JTBT5_1: Thunderbolt™ 5 Expansion Card Connector

This connector allows you to connect MSI thunderbolt™ 5 Expansion Card.

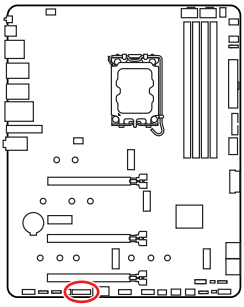

Pin	Signal Name	Pin	Signal Name
1	5VDUAL	2	5VDUAL
3	GPIO	4	GPIO
5	SLP_S3#	6	GPIO
7	SLP_S4#	8	No Pin
9	Ground	10	PD_EC_I2C_SCL
11	GPIO	12	PD_EC_I2C_SDA
13	GPIO	14	Ground
15	TBT_CARD_DET#	16	PD_EC_I2C_INT
17	GPIO	18	PS_ON#

JDASH1 : Tuning Controller connector

This connector is used to connect an optional Tuning Controller module.

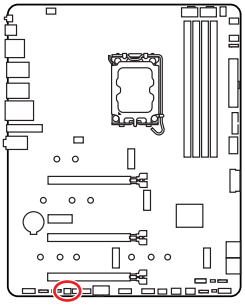

Pin	Signal Name	Pin	Signal Name
1	No Pin	2	NC
3	MCU_SMB_SCL_M	4	MCU_SMB_SDA_M
5	VCC5	6	Ground

JTPM1: TPM Module Connector

This connector is designed for a Trusted Platform Module (TPM) to enable secure storage of sensitive data and perform cryptographic operations that ensure the integrity of your system.

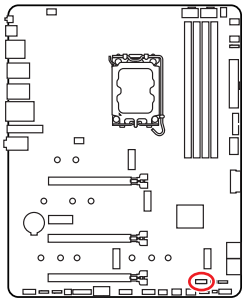

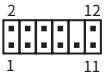

Pin	Signal Name	Pin	Signal Name
1	SPI Power	2	SPI Chip Select
3	Master In Slave Out (SPI Data)	4	Master Out Slave In (SPI Data)
5	Reserved	6	SPI Clock
7	Ground	8	SPI Reset
9	Reserved	10	No Pin
11	Reserved	12	Interrupt Request

Important

The TPM module is not included and must be purchased separately.

CPU_PWR1~2, ATX_PWR1, PCIE_PWR1: Power Connectors

These power connectors allow you to connect an ATX power supply.

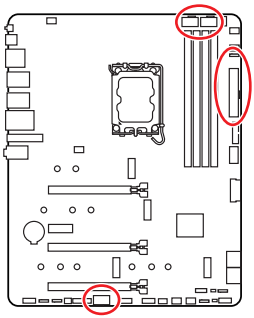

CPU_PWR1~2

ATX_PWR1

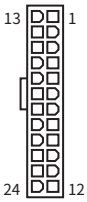

PCIE_PWR1

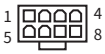

CPU_PWR1~2

Pin	Signal Name	Pin	Signal Name
1	Ground	2	Ground
3	Ground	4	Ground
5	+12V	6	+12V
7	+12V	8	+12V

ATX_PWR1

Pin	Signal Name	Pin	Signal Name
1	+3.3V	2	+3.3V
3	Ground	4	+5V
5	Ground	6	+5V
7	Ground	8	PWR OK
9	5VSB	10	+12V
11	+12V	12	+3.3V
13	+3.3V	14	-12V
15	Ground	16	PS-ON#
17	Ground	18	Ground
19	Ground	20	Res
21	+5V	22	+5V
23	+5V	24	Ground

PCIE_PWR1

Pin	Signal Name	Pin	Signal Name
1	+12V	2	+12V
3	+12V	4	SENS1
5	Ground	6	SENS0
7	Ground	8	Ground

Important

Make sure that all the power cables are securely connected to a proper ATX power supply to ensure stable operation of the motherboard.

JCI1: Chassis Intrusion Connector

This connector allows you to connect the chassis intrusion switch cable.

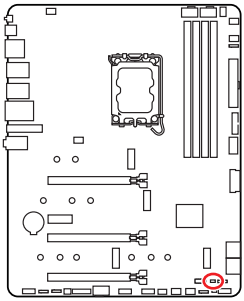

Normal
(default)

Trigger the chassis
intrusion event

Using chassis intrusion detector

1. Connect the **JCI1** connector to the chassis intrusion switch/ sensor on the chassis.
2. Close the chassis cover.
3. Go to **BIOS > Security > Chassis Intrusion Configuration**.
4. Set **Chassis Intrusion** to **Enabled**.
5. Press **F10** to save and exit and then press the **Enter** key to select **Yes**.
6. Once the chassis cover is opened again, a warning message will be displayed on screen when the computer is turned on.

Resetting the chassis intrusion warning

1. Go to **BIOS > Security > Chassis Intrusion Configuration**.
2. Set **Chassis Intrusion** to **Reset**.
3. Press **F10** to save and exit and then press the Enter key to select **Yes**.

JUSBC1: USB 20Gbps Type-C Front Panel Connectors

This USB connector allows you to connect to the USB Type-C® port on the front panel and supports data transfer speeds of up to 20Gbps. It features a user-friendly design that ensures proper orientation when connecting the cable.

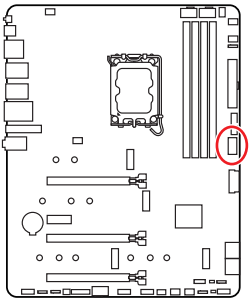

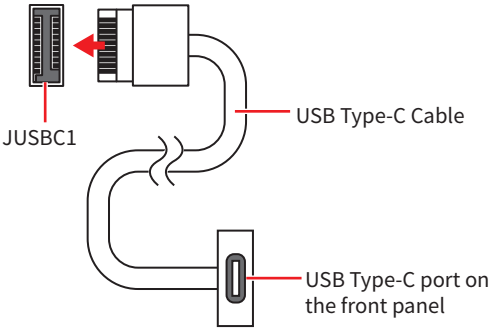

JUSB3~4: USB 5Gbps Connectors

These USB connectors allow you to connect to USB ports on the chassis panel and supports data transfer speeds of up to 5Gbps.

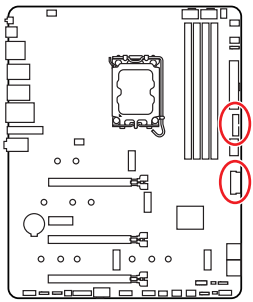

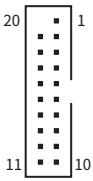

Pin	Signal Name	Pin	Signal Name
1	Power	2	USB3_RX_DN
3	USB3_RX_DP	4	Ground
5	USB3_TX_C_DN	6	USB3_TX_C_DP
7	Ground	8	USB2.0-
9	USB2.0+	10	Ground
11	USB2.0+	12	USB2.0-
13	Ground	14	USB3_TX_C_DP
15	USB3_TX_C_DN	16	Ground
17	USB3_RX_DP	18	USB3_RX_DN
19	Power	20	No Pin

Important

Note that the Power and Ground pins must be connected correctly to avoid possible damage.

JUSB1~2: USB 2.0 Connectors

These connectors enable the connection of front-panel USB ports supporting speeds of up to 480 Mbit/s.

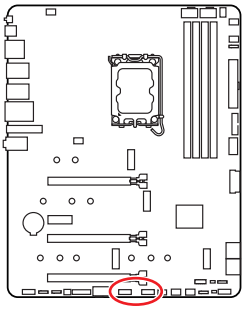

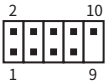

Pin	Signal Name	Pin	Signal Name
1	VCC	2	VCC
3	USB0-	4	USB1-
5	USB0+	6	USB1+
7	Ground	8	Ground
9	No Pin	10	NC

Important

- *Note that the VCC and Ground pins must be connected correctly to avoid possible damage.*
- *In order to recharge your iPad, iPhone and iPod through USB ports, please install MSI Center utility.*

JBAT1: Clear CMOS (Reset BIOS) Jumper

There is CMOS memory onboard that is external powered from a battery located on the motherboard to save system configuration data. If you want to clear the system configuration, set the jumpers to clear the CMOS memory.

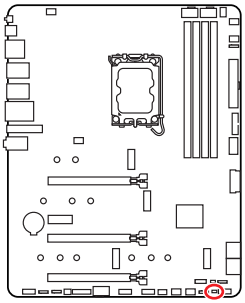

Keep Data
(default)

Clear CMOS/
Reset BIOS

Resetting BIOS to default values

1. Power off the computer and unplug the power cord.
2. Use a jumper cap to short **JBAT1** for about 5-10 seconds.
3. Remove the jumper cap from **JBAT1**.
4. Plug the power cord and Power on the computer.

CPU_FAN1, PUMP_SYS1, SYS_FAN1~5: Fan Connectors

Fan connectors can be divided into two categories: PWM Mode and DC Mode. PWM Mode fan connectors provide a constant 12V output and adjust fan speed with a speed control signal. DC Mode fan connectors control fan speed by changing voltage. Please refer to the following specification table for the fan connector mode of your motherboard.

You can control fans in **BIOS> HARDWARE MONITOR** panel. Enabling Smart Fan Mode will regulate fan speed based on CPU or system temperature. Disabling Smart Fan Mode will set the fan to full speed.

Important

*You can set DC or PWM in **HARDWARE MONITOR** panel to your fan type if your motherboard supports it. Make sure fans are working properly after switching the PWM/ DC mode.*

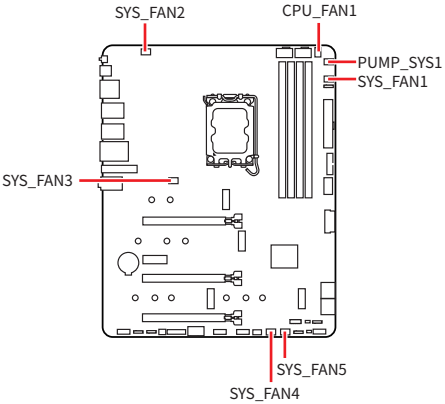

PWM Mode pin definition

Pin	Signal Name	Pin	Signal Name
1	Ground	2	+12V
3	Sense	4	Speed Control Signal

DC Mode pin definition

Pin	Signal Name	Pin	Signal Name
1	Ground	2	Voltage Control
3	Sense	4	NC

Fan specifications for fan connectors

Connector	Fan mode	Max. current	Max. power
CPU_FAN1	Auto mode	2A	24W
PUMP_SYS1	PWM mode	3A	36W
SYS_FAN1~5	Auto mode	1A	12W

Important

The auto mode fan connectors can automatically detect PWM and DC modes.

JRGB1: RGB LED connector

The JRGB connector allows you to connect the 5050 RGB LED strips 12V.

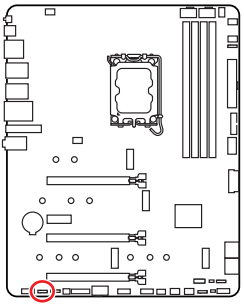

Pin	Signal Name	Pin	Signal Name
1	+12V	2	G
3	R	4	B

RGB LED Strip Connection

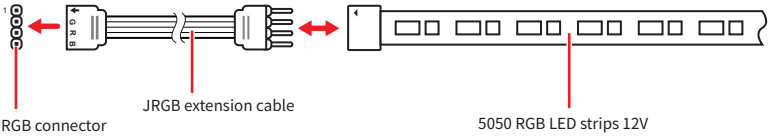

RGB LED Fan Connection

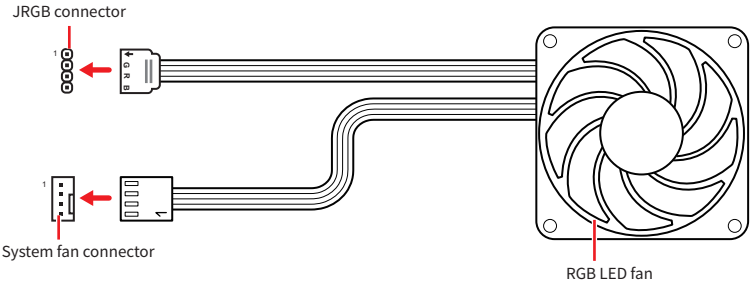

Important

- *The JRGB connector supports up to 2 meters continuous 5050 RGB LED strips (12V/G/R/B) with the maximum power rating of 3A (12V).*
- *Always turn off the power supply and unplug the power cord from the power outlet before installing or removing the RGB LED strip.*
- *Please use MSI' s software to control the extended LED strip.*

JARGB_V2_1~3: A-RAINBOW V2 (ARGB Gen2) LED connectors

The JARGB_V2 connectors allow you to connect the ARGB Gen2 and the ARGB-based LED strips. The JARGB_V2 connector supports up to 240 individually addressable RGB LEDs with maximum power rating of 3A (5V).

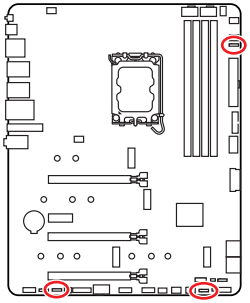

Pin	Signal Name	Pin	Signal Name
1	+5V	2	Data
3	No Pin	4	Ground

Addressable RGB LED Strip Connection

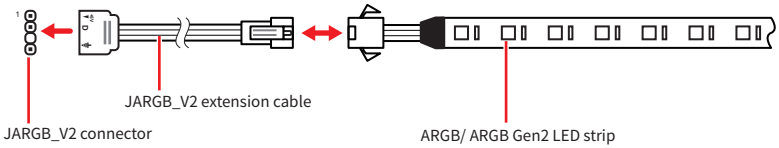

Addressable RGB LED Fan Connection

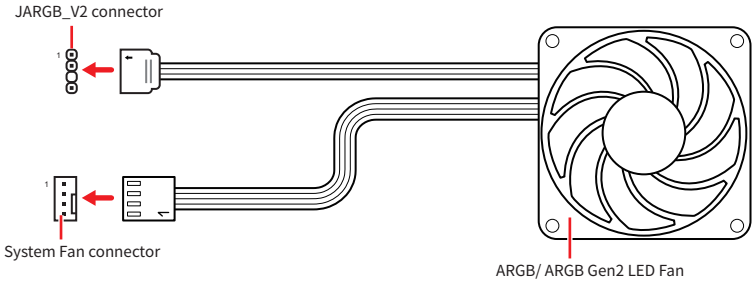

CAUTION

Do not connect the wrong type of LED strips. The JRGB connector and the JARGB_V2 connector provide different voltages, and connecting the ARGB 5V LED strip to the JRGB connector will result in damage to the LED strip.

Important

- *If you connect the ARGB Gen1 and ARGB Gen2 LED strips into the same connector, it may cause some issues. Please do not mix the ARGB Gen1 LED and the ARGB Gen2 LED strips together.*
- *It is recommended that you install LED strips with the same specification to achieve the best effects.*
- *Always turn off the power supply and unplug the power cord from the power outlet before installing or removing the addressable RGB LED strip.*
- *Please use MSI' s software to control the extended LED strip.*

JAF_1: EZ Conn-Header V1

This header is designed to connect MPG EZ120 ARGB fans, simplifying cable routing. It also allows you to connect the ARGB Gen1 and Gen2 LED strips and system fans.

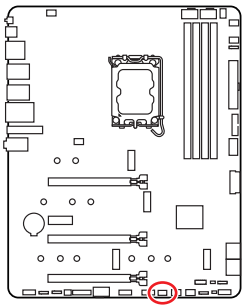

Pin	Signal Name	Pin	Signal Name
1	Ground	2	5V
3	12V	4	DATA
5	Sense	6	Ground
7	Speed Control Signal	8	No Pin

MPG EZ120 ARGB Fan Connection

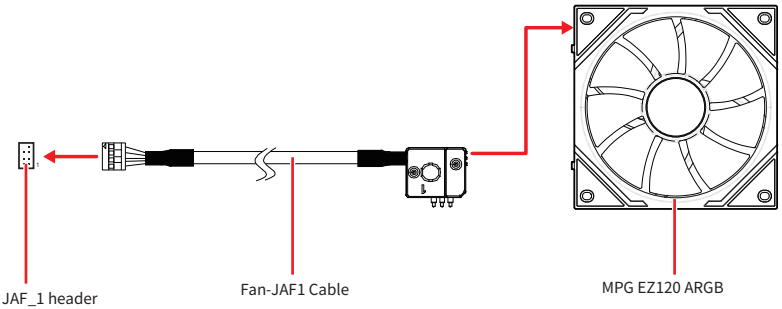

Addressable RGB LED Fan Connection

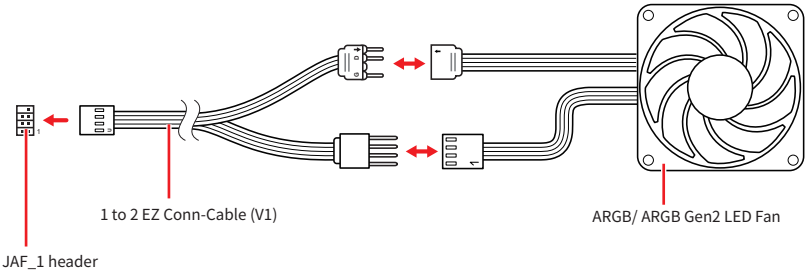

Important

- *The Fan-JAF1 Cable is included in the packaging of MPG EZ120 ARGB.*
- *For more information on how to install MPG EZ120 ARGB, please refer to https://msi.gm/S5035E56.*

Onboard LEDs

EZ Debug LED

These LEDs indicate the debug status of the motherboard.

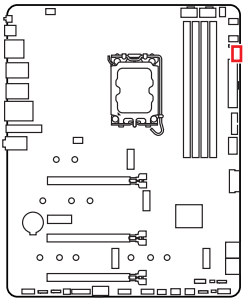

LED Color	Status
Red	CPU is not detected or fail
Yellow	DRAM is not detected or fail
White	GPU is not detected or fail
Green	Booting device is not detected or fail

Installing OS, Drivers & MSI Center

Please download and update the latest utilities and drivers at www.msi.com

Installing Windows 11

1. Power on the computer.
2. Insert the Windows 11 installation disc/ USB into your computer.
3. Press the **Restart** button on the computer case.
4. Press **F11** key during the computer POST (Power-On Self Test) to get into Boot Menu.
5. Select the Windows 11 installation disc/USB from the Boot Menu.
6. Press any key if screen shows **Press any key to boot from CD or DVD...** message. If not, please skip this step.
7. Follow the instructions on the screen to install Windows 11.

Installing Drivers with MSI Driver Utility Installer

Important

- *Some new network chips have not been natively supported by Windows 11. It is recommended that the **LAN driver** be installed before installing drivers with MSI Driver Utility Installer. Please refer to www.msi.com to install the LAN driver for your motherboard.*
- *The MSI Driver Utility Installer will only pop up once. If you cancel or close it during the process, please refer to the Live Update chapter of the MSI Center manual to install the drivers. You can also go to www.msi.com to search your motherboard and download the drivers.*
- *MSI Driver Utility Installer needs to be installed over the internet.*

1. Start up your computer in Windows 11.
2. Select **Start** > **Settings** > **Windows Update**, and then select **Check** for updates.
3. MSI Driver Utility Installer will pop up automatically.

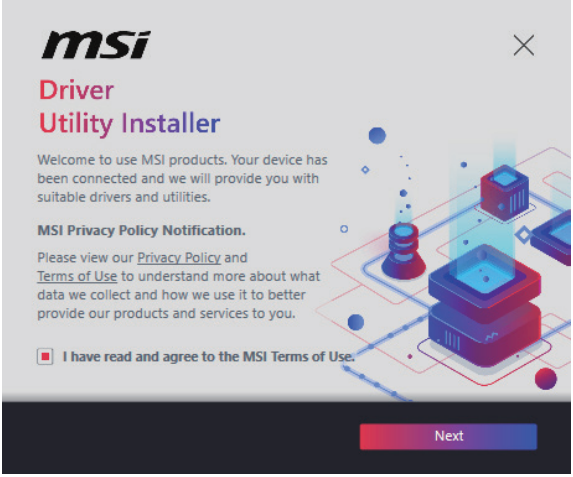

4. Select the **I have read and agree to the MSI Terms of Use** check box, and then click Next.

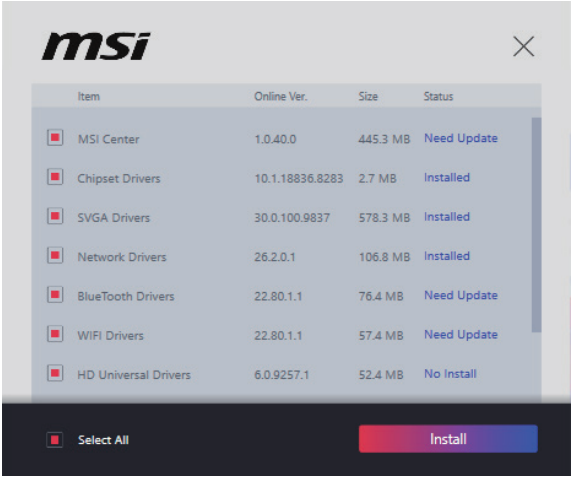

5. Check the **Select All** checkbox in the lower-left corner and click **Install** to install MSI Center and drivers. The installation progress will be shown at the bottom.

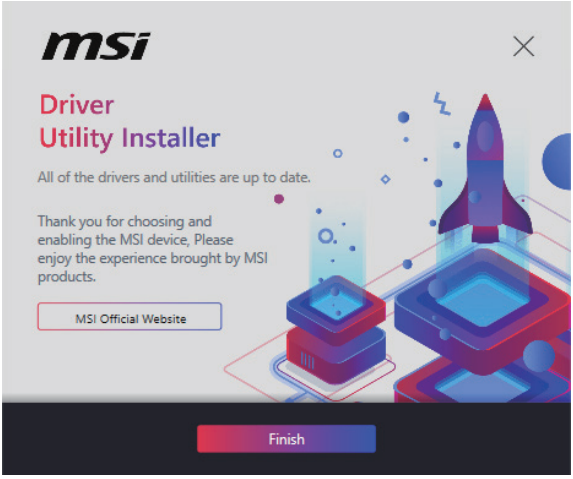

6. Once the progress has completed, click **Finish**.

MSI Center

MSI Center is an application that helps you easily optimize game settings and smoothly use content creation softwares. It also allows you to control and synchronize LED light effects on PCs and other MSI products. With MSI Center, you can customize ideal modes, monitor system performance, and adjust fan speed.

MSI Center User Guide

If you would like to know more information about MSI Center, please refer to https://msi.gm/S391169E

or scan the QR code to access.

Important

Functions may vary depending on the product you have.

UEFI BIOS

MSI UEFI BIOS is compatible with UEFI (Unified Extensible Firmware Interface) architecture. UEFI has many new functions and advantages that traditional BIOS cannot achieve, and it will completely replace BIOS in the future. The MSI UEFI BIOS uses UEFI as the default boot mode to take full advantage of the new chipset' s capabilities.

Important

The term BIOS in this user guide refers to UEFI unless otherwise noted.

UEFI advantages

- Fast booting - UEFI can directly boot the operating system and save the BIOS self-test process.
- Supports for hard drive partitions larger than 2 TB.
- Supports more than 4 primary partitions with a GUID Partition Table (GPT).
- Supports unlimited number of partitions.
- Supports full capabilities of new devices - new devices may not provide backward compatibility.
- Supports secure startup - UEFI can check the validity of the operating system to ensure that no malware tampers with the startup process.

Incompatible UEFI cases

- **32-bit Windows operating system** - this motherboard supports only Windows 11 64-bit operating system.
- **Older graphics card** - the system will detect your graphics card. If you use older graphics cards, it may display a warning message **There is no GOP (Graphics Output protocol) support detected in this graphics card**.

Important

We recommend that you replace it with a graphics card supporting GOP/UEFI or use CPU with integrated graphics for having normal function.

BIOS Setup

The default settings offer the optimal performance for system stability in normal conditions. You should **always keep the default settings** to avoid possible system damage or failure booting unless you are familiar with BIOS.

Important

- *BIOS items are continuously updated for better system performance. Therefore, the description may be slightly different from the latest BIOS and should be for reference only. You could also refer to the **HELP** information panel in BIOS.*
- *The BIOS screens, options and settings will vary depending on the products you have.*

BIOS User Guide

If you' d like to know more instructions on setting up the BIOS, please refer to https://msi.gm/S1154EEB
or scan the QR code to access.

Important

The appearance of the BIOS user guide may differ based on your motherboard model. Please refer to your motherboard' s BIOS for specific settings and options.

Entering BIOS Setup

Press **Delete** key, when the **Press DEL key to enter Setup Menu, F11 to enter Boot Menu** message appears on the screen during the boot process.

Function key

+/ -: Increase / decrease the value

Enter: Select the item

ESC: Exit

Tab: Next selection

Ctrl+F: Enter Search menu

F1: General Help list

F2: Add/ Remove a favorite item

F3: Enter Favorites menu

F4: Enter CPU core center & memory center information menu

F5: Enter Hardware Monitor menu

F6: Load optimized defaults

F7: Switch between Advanced mode and EZ mode

F8: Load Overclocking Profile

F9: Save Overclocking Profile

F10: Save Change and Reset*

F12: Take a screenshot and save it to USB flash drive (FAT/ FAT32 format only).

* Pressing **F10** displays a confirmation message summarizing your changes. Select **Yes** or **No** to confirm.

How to find the BIOS version?

After entering the BIOS, find the BIOS version in the information box.

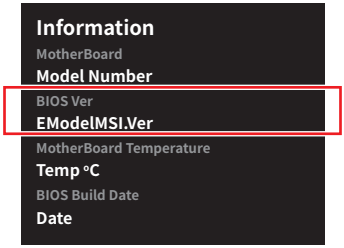

Resetting BIOS

If you encounter certain issues with your computer, restoring the default BIOS settings might help. You can reset the BIOS settings using the following methods:

- Enter the BIOS setup and press **F6** to load the optimized defaults.
- Use the **Clear CMOS jumper** on the motherboard to reset the BIOS.
- If your motherboard has a **Clear CMOS button** on the rear I/O panel, press it to reset the BIOS.

Important

*Ensure the computer is powered off before clearing the CMOS data. For more details, refer to the **Clear CMOS jumper/button** section in the manual.*

Updating BIOS

Updating BIOS with M-FLASH

Before starting the M-Flash process, make sure you have:

- A USB flash drive with a capacity of 32GB or less that is formatted to FAT32.

Important

M-Flash only supports FAT32 format, and the USB flash drive should not exceed 32GB.

- A computer with internet access.

Please follow the steps below to update BIOS:

1. Download the latest BIOS file from the MSI website that matches your motherboard model, and save it to the USB flash drive.
2. If your motherboard has a Multi-BIOS switch, switch to the target BIOS ROM.
3. Insert the USB flash drive into your motherboard' s USB port.
4. Enter flash mode by either:
   - Rebooting and pressing **Ctrl + F5** during POST, then clicking **Yes** to reboot the system.
   - Rebooting and pressing **Del** during POST to enter BIOS, then clicking the M-FLASH button and clicking **Yes** to reboot.
5. Select a BIOS file from the **M-FLASH File** menu and press **Enter**.
6. When prompted by a File Check message, click **Yes** to start the BIOS update.

Once the update reaches 100%, the system will reboot automatically.

Updating BIOS with MSI Center

Before updating:

- Ensure the LAN driver is installed, and the internet connection is working properly.
- Close all other applications before updating the BIOS.

To update BIOS:

1. Install and launch MSI Center, then go to **Support** page.
2. Select **Live Update** and click on **Advance** button.
3. Select the BIOS file and click on **Install** button.
4. The installation reminder will appear, then click the **Install** button.

The system will automatically restart to update the BIOS. Once the flashing process is complete, the system will restart.

Updating BIOS with Flash BIOS Button

1. Download the latest BIOS file from the MSI website that matches your motherboard model.
2. Rename the BIOS file to **MSI.ROM**, and save it to the root directory of a USB flash device.
3. Connect the power supply to **CPU_PWR1** and **ATX_PWR1**. (You don’ t need to install the CPU and memory.)
4. Plug the USB flash device with the **MSI.ROM** file into the **Flash BIOS Port** on the rear I/O panel.
5. Press the **Flash BIOS Button** to start flashing the BIOS. The LED will start flashing to indicate the process has begun.

The LED will turn off when the process is complete.

Regulatory Notices

FCC-B Radio Frequency Interference Statement

This equipment has been tested and found to comply with the limits for a Class B digital device, pursuant to part 15 of the FCC rules. These limits are designed to provide reasonable protection against harmful interference in a residential installation. This equipment generates, uses and radiates radio frequency energy, and, if not installed and used in accordance with the instructions, may cause harmful interference to radio communications. However, there is no guarantee that interference will not occur in a particular installation. If this equipment does cause harmful interference to radio or television reception, which can be determined by turning the equipment off and on, the user is encouraged to try to correct the interference by one or more of the following measures:

- Reorient or relocate the receiving antenna.
- Increase the separation between the equipment and receiver.
- Connect the equipment into an outlet on a circuit different from that to which the receiver is connected.

NOTE

- The changes or modifications not expressly approved by the party responsible for compliance could void the user' s authority to operate the equipment.
- Shield interface cables and AC power cord, if any, must be used in order to comply with the emission limits.

FCC Conditions

This device complies with part 15 of the FCC Rules. Operation is subject to the following two conditions:

- This device may not cause harmful interference.
- This device must accept any interference received, including interference that may cause undesired operation.

MSI Computer Corp.

901 Canada Court, City of Industry, CA 91748, USA

(626)913-0828

www.msi.com

CE Conformity

Products bearing the CE marking comply with one or more of the following EU Directives as may be applicable:

- RED 2014/53/EU
- Low Voltage Directive 2014/35/EU
- EMC Directive 2014/30/EU
- RoHS Directive 2011/65/EU
- ErP Directive 2009/125/EC

Compliance with these directives is assessed using applicable European Harmonized Standards.

The point of contact for regulatory matters is MSI-Europe: Eindhoven 5706 5692 ER Son.

Products with Radio Functionality (EMF)

This product incorporates a radio transmitting and receiving device. For computers in normal use, a separation distance of 20 cm ensures that radio frequency exposure levels comply with EU requirements. Products designed to be operated at closer proximities, such as tablet computers, comply with applicable EU requirements in typical operating positions. Products can be operated without maintaining a separation distance unless otherwise indicated in instructions specific to the product.

Restrictions for Products with Radio Functionality

CAUTION: IEEE 802.11x wireless LAN with 5.15~5.35 GHz frequency band is restricted for indoor use only in all European Union member states, EFTA (Iceland, Norway, Liechtenstein), and most other European countries (e.g., Switzerland, Turkey, Republic of Serbia). Using this WLAN application outdoors might lead to interference issues with existing radio services.

Radio frequency bands and maximum power levels

- Features: Wi-Fi 7, BT
- Frequency Range: 2.4 GHz: 2400~2485MHz; 5 GHz: 5150~5350MHz, 5470~5725MHz, 5725~5850MHz; 6 GHz: 5955~6415MHz
- Max Power Level: 2.4 GHz: 20dBm; 5 GHz: 23dBm; 6 GHz: 23dBm

Wireless Radio Use

This device is restricted to indoor use when operating in the 2.4GHz, 5GHz, 6GHz frequency band.

Cet appareil doit être utilisé à l' intérieur.

당해 무선설비는 운용중 전파혼신 가능성이 있음.

この製品は、周波数帯域 2.4GHz, 5GHz, 6GHz で動作しているときは、屋内においてのみ使用可能です。

NCC無線設備警告聲明

工作頻率2.4GHz, 5GHz, 6GHz該頻段限於室內使用。

經型式認證合格之低功率射頻電機，非經許可，公司、商號或使用者均不得擅自變更頻率、加大功率或變更原設計之特性及功能。

低功率射頻電機之使用不得影響飛航安全及干擾合法通信；經發現有干擾現象時，應立即停用，並改善至無干擾時方得繼續使用。前項合法通信，指依電信法規定作業之無線電通信。低功率射頻電機須忍受合法通信或工業、科學及醫療用電波輻射性電機設備之干擾。

Compliance Statement of Innovation, Science and Economic Development Canada (ISED)

This device complies with with Innovation, Science and Economic Development Canada' s licence-exempt RSS(s). Operation is subject to the following two conditions: (1) this device may not cause interference, and (2) this device must accept any interference, including interference that may cause undesired operation of the device.

Operation in the band 5150-5250 MHz is only for indoor use to reduce the potential for harmful interference to co-channel mobile satellite systems.

CAN ICES-003(B)/NMB-003(B)

Australia and New Zealand notice

This equipment incorporates a radio transmitting and receiving device. In normal use, a separation distance of 20 cm ensures that radio frequency exposure levels comply with the Australian and New Zealand Standards.

クラスB情報技術装置

この装置は、クラスB情報技術装置です。この装置は、家庭環境で使用することを目的としていますが、この装置がラジオやテレビジョン受信機に近接して使用されると、受信障害を引き起こすことがあります。取扱説明書に従って正しい取り扱いをして下さい。

VCCI-B

KC인증서

R-R-MSI-20-7E34

상호: (주)엠에스아이코리아
제품명: 메인보드
모델명: 20-7E34
제조년월: 2024년
제조자 및 제조국가: MSI/중국

Battery Information

European Union:

Batteries, battery packs, and accumulators should not be disposed of as unsorted household waste. Please use the public collection system to return, recycle, or treat them in compliance with the local regulations.

BSMI:

廢電池請回收
For better environmental protection, waste batteries should be collected separately for recycling or special disposal.

California, USA:

The button cell battery may contain perchlorate material and requires special handling when recycled or disposed of in California.
For further information please visit:
https://dtsc.ca.gov/perchlorate/

⚠WARNING

- **INGESTION HAZARD**: This product contains a button cell or coin battery.
- **DEATH** or serious injury can occur if ingested.
- A swallowed button cell or coin battery can cause **Internal Chemical Burns** in as little as **2 hours**.
- **KEEP** new and used batteries **OUT OF REACH OF CHILDREN**
- **Seek immediate medical attention** if a battery is suspected to be swallowed or inserted inside any part of the body.

- Remove and immediately recycle or dispose of used batteries according to local regulations and keep away from children. Do NOT dispose of batteries in household trash or incinerate.
- Even used batteries may cause severe injury or death. Call a local poison control center for treatment information.
- Battery type: CR2032
- Battery voltage: 3V
- Non-rechargeable batteries are not to be recharged.
- Do not force discharge, recharge, disassemble, heat above (manufacturer' s specified temperature rating) or incinerate. Doing so may result in injury due to venting, leakage or explosion resulting in chemical burns.
- This product contains an irreplaceable battery.
- This icon indicates that a swallowed button battery can cause serious injury or death. Please keep batteries out of sight or reach of children.

Chemical Substances Information

In compliance with chemical substances regulations, such as the EU REACH Regulation (Regulation EC No. 1907/2006 of the European Parliament and the Council), MSI provides the information of chemical substances in products at:

https://csr.msi.com/global/index

Environmental Policy

- The product has been designed to enable proper reuse of parts and recycling and should not be thrown away at its end of life.
- Users should contact the local authorized point of collection for recycling and disposing of their end-of-life products.
- Visit the MSI website and locate a nearby distributor for further recycling information.
- Users may also reach us at gpcontdev@msi.com for information regarding proper Disposal, Take-back, Recycling, and Disassembly of MSI products.

WEEE (Waste Electrical and Electronic Equipment) Statement

ENGLISH

To protect the global environment and as an environmentalist, MSI must remind you that...

Under the European Union ("EU") Directive on Waste Electrical and Electronic Equipment, Directive 2002/96/EC, which takes effect on August 13, 2005, products of "electrical and electronic equipment" cannot be discarded as municipal wastes anymore, and manufacturers of covered electronic equipment will be obligated to take back such products at the end of their useful life. MSI will comply with the product take back requirements at the end of life of MSI-branded products that are sold into the EU. You can return these products to local collection points.

DEUTSCH

Hinweis von MSI zur Erhaltung und Schutz unserer Umwelt

Gemäß der Richtlinie 2002/96/EG über Elektro- und Elektronik-Altgeräte dürfen Elektro- und Elektronik-Altgeräte nicht mehr als kommunale Abfälle entsorgt werden. MSI hat europaweit verschiedene Sammel- und Recyclingunternehmen beauftragt, die in die Europäische Union in Verkehr gebrachten Produkte, am Ende seines Lebenszyklus zurückzunehmen. Bitte entsorgen Sie dieses Produkt zum gegebenen Zeitpunkt ausschliesslich an einer lokalen Altgerätesammelstelle in Ihrer Nähe.

FRANÇAIS

En tant qu' écologiste et afin de protéger l' environnement, MSI tient à rappeler ceci...

Au sujet de la directive européenne (EU) relative aux déchets des équipement électriques et électroniques, directive 2002/96/EC, prenant effet le 13 août 2005, que les produits électriques et électroniques ne peuvent être déposés dans les décharges ou tout simplement mis à la poubelle. Les fabricants de ces équipements seront obligés de récupérer certains produits en fin de vie. MSI prendra en compte cette exigence relative au retour des produits en fin de vie au sein de la communauté

européenne. Par conséquent vous pouvez retourner localement ces matériels dans les points de collecte.

РУССКИЙ

Компания MSI предпринимает активные действия по защите окружающей среды, поэтому напоминаем вам, что....

В соответствии с директивой Европейского Союза (EC) по предотвращению загрязнения окружающей среды использованным электрическим и электронным оборудованием (директива WEEE 2002/96/EC), вступающей в силу 13 августа 2005 года, изделия, относящиеся к электрическому и электронному оборудованию, не могут рассматриваться как бытовой мусор, поэтому производители вышеперечисленного электронного оборудования обязаны принимать его для переработки по окончании срока службы. MSI обязуется соблюдать требования по приему продукции, проданной под маркой MSI на территории EC, в переработку по окончании срока службы. Вы можете вернуть эти изделия в специализированные пункты приема.

ESPAÑOL

MSI como empresa comprometida con la protección del medio ambiente, recomienda:

Bajo la directiva 2002/96/EC de la Unión Europea en materia de desechos y/o equipos electrónicos, con fecha de rigor desde el 13 de agosto de 2005, los productos clasificados como “eléctricos y equipos electrónicos” no pueden ser depositados en los contenedores habituales de su municipio, los fabricantes de equipos electrónicos, están obligados a hacerse cargo de dichos productos al termino de su período de vida. MSI estará comprometido con los términos de recogida de sus productos vendidos en la Unión Europea al final de su periodo de vida. Usted debe depositar estos productos en el punto limpio establecido por el ayuntamiento de su localidad o entregar a una empresa autorizada para la recogida de estos residuos.

NEDERLANDS

Om het milieu te beschermen, wil MSI u eraan herinneren dat….

De richtlijn van de Europese Unie (EU) met betrekking tot Vervuiling van Electrische en Electronische producten (2002/96/EC), die op 13 Augustus 2005 in zal gaan kunnen niet meer beschouwd worden als vervuiling. Fabrikanten van dit soort producten worden verplicht om producten retour te nemen aan het eind van hun levenscyclus. MSI zal overeenkomstig de richtlijn handelen voor de producten die de merknaam MSI dragen en verkocht zijn in de EU. Deze goederen kunnen geretourneerd worden op lokale inzamelingspunten.

SRPSKI

Da bi zaštitili prirodnu sredinu, i kao preduzeće koje vodi računa o okolini i prirodnoj sredini, MSI mora da vas podesti da...
Po Direktivi Evropske unije (“EU”) o odbačenoj ekektronskoj i električnoj opremi, Direktiva 2002/96/EC, koja stupa na snagu od 13. Avgusta 2005, proizvodi koji spadaju pod “elektronsku i električnu opremu” ne mogu više biti odbačeni kao običan otpad i proizvođači ove opreme biće prinuđeni da uzmu natrag ove proizvode na kraju njihovog uobičajenog veka trajanja. MSI će poštovati zahtev o preuzimanju ovakvih proizvoda kojima je istekao vek trajanja, koji imaju MSI oznaku i koji su prodati u EU. Ove proizvode možete vratiti na lokalnim mestima za prikupljanje.

POLSKI

Aby chronić nasze środowisko naturalne oraz jako firma dbająca o ekologię, MSI przypomina, że...Zgodnie z Dyrektywą Unii Europejskiej (“UE”) dotyczącą odpadów produktów elektrycznych i elektronicznych (Dyrektywa 2002/96/EC), która wchodzi w życie 13 sierpnia 2005, tzw. “produkty oraz wyposażenie elektryczne i elektroniczne “ nie mogą być traktowane jako śmieci komunalne, tak więc producenci tych produktów będą zobowiązani do odbierania ich w momencie gdy produkt jest wycofywany z użycia. MSI wypełni wymagania UE, przyjmując produkty (sprzedawane na terenie Unii Europejskiej) wycofywane z użycia. Produkty MSI będzie można zwracać w wyznaczonych punktach zbiorczych.

TÜRKÇE

Çevreci özelliğiyle bilinen MSI dünyada çevreyi korumak için hatırlatır:
Avrupa Birliği (AB) Kararnamesi Elektrik ve Elektronik Malzeme Atığı, 2002/96/EC Kararnamesi altında 13 Ağustos 2005 tarihinden itibaren geçerli olmak üzere, elektrikli ve elektronik malzemeler diğer atıklar gibi çöpe atılamayacak ve bu elektonik cihazların üreticileri, cihazların kullanım süreleri bittikten sonra ürünleri geri toplamakla yükümlü olacaktır. Avrupa Birliği’ne satılan MSI markalı ürünlerin kullanım süreleri bittiğinde MSI ürünlerin geri alınması isteği ile işbirliği içerisinde olacaktır. Ürünlerinizi yerel toplama noktalarına bırakabilirsiniz.

ČESKY

Záleží nám na ochraně životního prostředí - společnost MSI upozorňuje...

Podle směrnice Evropské unie (“EU”) o likvidaci elektrických a elektronických výrobků 2002/96/EC platné od 13. srpna 2005 je zakázáno likvidovat “elektrické a elektronické výrobky” v běžném komunálním odpadu a výrobci elektronických výrobků, na které se tato směrnice vztahuje, budou povinni odebírat takové výrobky zpět po skončení jejich životnosti. Společnost MSI splní požadavky na odebírání výrobků značky MSI, prodávaných v zemích EU, po skončení jejich životnosti. Tyto výrobky můžete odevzdat v místních sběrnách.

MAGYAR

Annak érdekében, hogy környezetünket megvédjük, illetve környezetvédőként fellépve az MSI emlékezteti Önt, hogy ...

Az Európai Unió („EU”) 2005. augusztus 13-án hatályba lépő, az elektromos és elektronikus berendezések hulladékairól szóló 2002/96/EK irányelve szerint az elektromos és elektronikus berendezések többé nem kezelhetőek lakossági hulladékként, és az ilyen elektronikus berendezések gyártói kötelessé válnak az ilyen termékek visszavételére azok hasznos élettartama végén. Az MSI betartja a termékvisszavétellel kapcsolatos követelményeket az MSI márkanév alatt az EU-n belül értékesített termékek esetében, azok élettartamának végén. Az ilyen termékeket a legközelebbi gyűjtőhelyre viheti.

ITALIANO

Per proteggere l’ ambiente, MSI, da sempre amica della natura, ti ricorda che….

In base alla Direttiva dell’ Unione Europea (EU) sullo Smaltimento dei Materiali Elettrici ed Elettronici, Direttiva 2002/96/EC in vigore dal 13 Agosto 2005, prodotti appartenenti alla categoria dei Materiali Elettrici ed Elettronici non possono più essere eliminati come rifiuti municipali: i produttori di detti materiali saranno obbligati a ritirare ogni prodotto alla fine del suo ciclo di vita. MSI si adeguerà a tale Direttiva ritirando tutti i prodotti marchiati MSI che sono stati venduti all’ interno dell’ Unione Europea alla fine del loro ciclo di vita. È possibile portare i prodotti nel più vicino punto di raccolta

日本JIS C 0950材質宣言

日本工業規格JIS C 0950により、2006年7月1日以降に販売される特定分野の電気および電子機器について、製造者による含有物質の表示が義務付けられます。

https://csr.msi.com/tw/Japan-JIS-C-0950-Material-Declarations

India RoHS

This product complies with the “India E-waste (Management and Handling) Rule 2011” and prohibits use of lead, mercury, hexavalent chromium, polybrominated biphenyls or polybrominated diphenyl ethers in concentrations exceeding 0.1 weight % and 0.01 weight % for cadmium, except for the exemptions set in Schedule 2 of the Rule.

Türkiye EEE yönetmeliği

Türkiye Cumhuriyeti: EEE Yönetmeliğine Uygundur

Україна обмеження на наявність небезпечних речовин

Обладнання відповідає вимогам Технічного регламенту щодо обмеження використання деяких небезпечних речовин в електричному та електронному обладнані, затвердженого постановою Кабінету Міністрів України від 3 грудня 2008 № 1057.

Việt Nam RoHS

Kể từ ngày 01/12/2012, tất cả các sản phẩm do công ty MSI sản xuất tuân thủ Thông tư số 30/2011/TT-BCT quy định tạm thời về giới hạn hàm lượng cho phép của một số hóa chất độc hại có trong các sản phẩm điện, điện tử”

MS-7E34主板产品中有害物质的名称及含量

部件名称	有害物质					
	铅 (Pb)	汞 (Hg)	镉 (Cd)	六价铬 (Cr(VI))	多溴联苯 (PBB)	多溴二苯醚 (PBDE)
印刷电路板组件*	╳	○	○	○	○	○
纽扣电池	○	○	○	○	○	○
外部信号连接头	╳	○	○	○	○	○
其他 (例: 线材等)	╳	○	○	○	○	○

本表格依据 SJ/T 11364 的规定编制。

○: 表示该有害物质在该部件所有均质材料中的含量均在 GB/T 26572 规定的限量要求以下。

╳: 表示该有害物质至少在该部件的某一均质材料中的含量超出 GB/T 26572 规定的限量要求，但所有部件都符合欧盟RoHS要求。

* 印刷电路板组件: 包括印刷电路板及其构成的零部件。

■ 上述有毒有害物质或元素清单会依型号之部件差异而有所增减。

■ 产品部件本体上如有环保使用期限标识，以本体标识为主。

限用物質含有情況標示聲明書

設備名稱：電腦主機板　　型號(型式)：MS-7E34

單元	限用物質及其化學符號					
	鉛 (Pb)	汞 (Hg)	鎘 (Cd)	六價鉻 (Cr^{+6})	多溴聯苯 (PBB)	多溴二苯醚 (PBDE)
電路板	○	○	○	○	○	○
電子元件	—	○	○	○	○	○
金屬機構件	—	○	○	○	○	○
塑膠機構件	○	○	○	○	○	○

備考1. “超出0.1 wt %” 及 “超出0.01 wt %” 係指限用物質之百分比含量超出百分比含量基準值。

備考2. “○” 係指該項限用物質之百分比含量未超出百分比含量基準值。

備考3. “—” 係指該項限用物質為排除項目。

Copyright and Trademarks Notice

Copyright © Micro-Star Int' l Co., Ltd. All rights reserved. The MSI logo used is a registered trademark of Micro-Star Int' l Co., Ltd. All other marks and names mentioned may be trademarks of their respective owners. No warranty as to accuracy or completeness is expressed or implied. MSI reserves the right to make changes to this document without prior notice.

The terms HDMI™, HDMI™ High-Definition Multimedia Interface, HDMI™ Trade dress and the HDMI™ Logos are trademarks or registered trademarks of HDMI™ Licensing Administrator, Inc.

Technical Support

If a problem arises with your system and no solution can be obtained from the user guide, please contact your place of purchase or local distributor. Alternatively, please try the following help resources for further guidance.

- Visit the MSI website for technical guide, BIOS updates, driver updates, and other information: http://www.msi.com
- Register your product at: http://register.msi.com

Revision History

- Version 2.0, 2024/10, First release.