# PRO Series

## Motherboard

PRO B550M-P WIFI6E

PRO B550M-P

User Guide

# Contents

Quick Start ..... 4

Specifications ..... 17

Special Features ..... 21

Package Contents ..... 22

Back Panel Connectors ..... 23

- 1Gbps LAN Port LED Status Table ..... 24
- Audio Jacks Connection ..... 24
- Installing Antenna (For PRO B550M-P WIFI6E only) ..... 26

Overview of Components ..... 27

- Processor Socket ..... 28
- DIMM Slots ..... 29
- PCI_E1~E3: PCIe Expansion Slot ..... 31
- M2_1~2: M.2 Slots (Key M) ..... 32
- SATA1~4: SATA 6Gb/s Connectors ..... 34
- JAUD1: Front Audio Connector ..... 34
- JFP1, JFP2: Front Panel Connectors ..... 35
- CPU_PWR1, ATX_PWR1: Power Connectors ..... 36
- JCI1: Chassis Intrusion Connector ..... 37
- JCOM1 : Serial Port connector ..... 37
- JUSB1: USB Type-C® Front Panel Connector ..... 38
- JUSB2: USB 5Gbps Connector ..... 38
- JUSB3~4: USB 2.0 Connectors ..... 39
- JTPM1: TPM Module Connector ..... 39
- CPU_FAN1, SYS_FAN1~2: Fan Connectors ..... 40
- JBAT1: Clear CMOS (Reset BIOS) Jumper ..... 41
- JRGB1~2: RGB LED connectors ..... 42
- JARGB_V2_1~2: A-RAINBOW V2 (ARGB Gen2) LED connectors ..... 43

Onboard LEDs ..... 45

- EZ Debug LED ..... 45

Installing OS, Drivers & MSI Center.....46
Installing Drivers with MSI Driver Utility Installer..... 47
UEFI BIOS.....50
BIOS Setup ..... 51
Resetting BIOS ..... 52
Updating BIOS ..... 52
Regulatory Notices.....i

# Quick Start

This Quick Start provides clear diagrams to help you install the motherboard. Video demonstrations are also available for some installations. Visit these videos by clicking the provided URL on your phone or tablet' s web browser. Alternatively, you can scan the QR code to access the video directly.

## Preparing Tools and Components

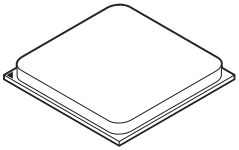

AMD® AM4 CPU

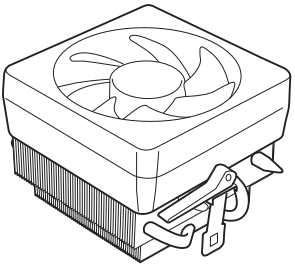

CPU Fan

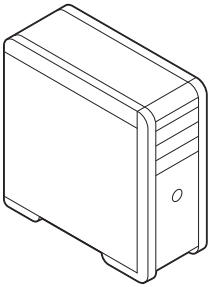

Chassis

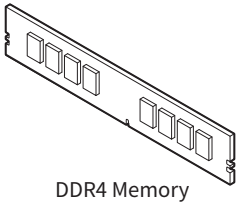

DDR4 Memory

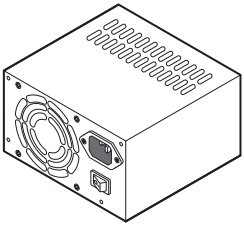

Power Supply Unit

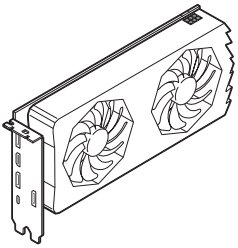

Graphics Card

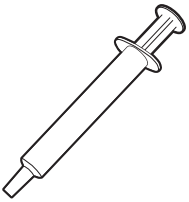

Thermal Paste

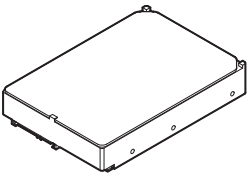

SATA Hard Disk Drive

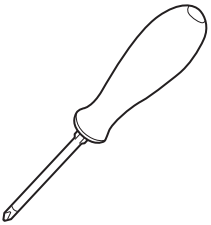

Phillips Screwdriver

A Package of Screws

## Safety Information

- The components included in this package are prone to damage from electrostatic discharge (ESD). Please adhere to the following instructions to ensure successful computer assembly.
- Ensure that all components are securely connected. Loose connections may cause the computer to not recognize a component or fail to start.
- Hold the motherboard by the edges to avoid touching sensitive components.
- It is recommended to wear an electrostatic discharge (ESD) wrist strap when handling the motherboard to prevent electrostatic damage. If an ESD wrist strap is not available, discharge yourself of static electricity by touching another metal object before handling the motherboard.
- Store the motherboard in an electrostatic shielding container or on an anti-static pad whenever the motherboard is not installed.
- Before turning on the computer, ensure that there are no loose screws or metal components on the motherboard or anywhere within the computer case.
- Do not boot the computer before installation is completed. This could cause permanent damage to the components as well as injury to the user.
- If you need help during any installation step, please consult a certified computer technician.
- Always turn off the power supply and unplug the power cord from the power outlet before installing or removing any computer component.
- Keep this user guide for future reference.
- Keep this motherboard away from humidity.
- Make sure that your electrical outlet provides the same voltage as is indicated on the PSU, before connecting the PSU to the electrical outlet.
- Place the power cord such a way that people can not step on it. Do not place anything over the power cord.
- All cautions and warnings on the motherboard should be noted.
- If any of the following situations arises, get the motherboard checked by service personnel:
  - Liquid has penetrated into the computer.
  - The motherboard has been exposed to moisture.
  - The motherboard does not work well or you can not get it work according to user guide.
  - The motherboard has been dropped and damaged.
  - The motherboard has obvious sign of breakage.
- Do not leave this motherboard in an environment above 60°C (140°F), it may damage the motherboard.

## Case stand-off notification

To prevent damage to the motherboard, any unnecessary mounting stand-off between the motherboard circuits and the computer case is prohibited. The Case standoff keep out zone signs will be marked on the backside of motherboard (as shown below) to serve as a warning to user.

## Avoid collision notification

Protective paint is printed around each screw hole to prevent parts from being scratched.

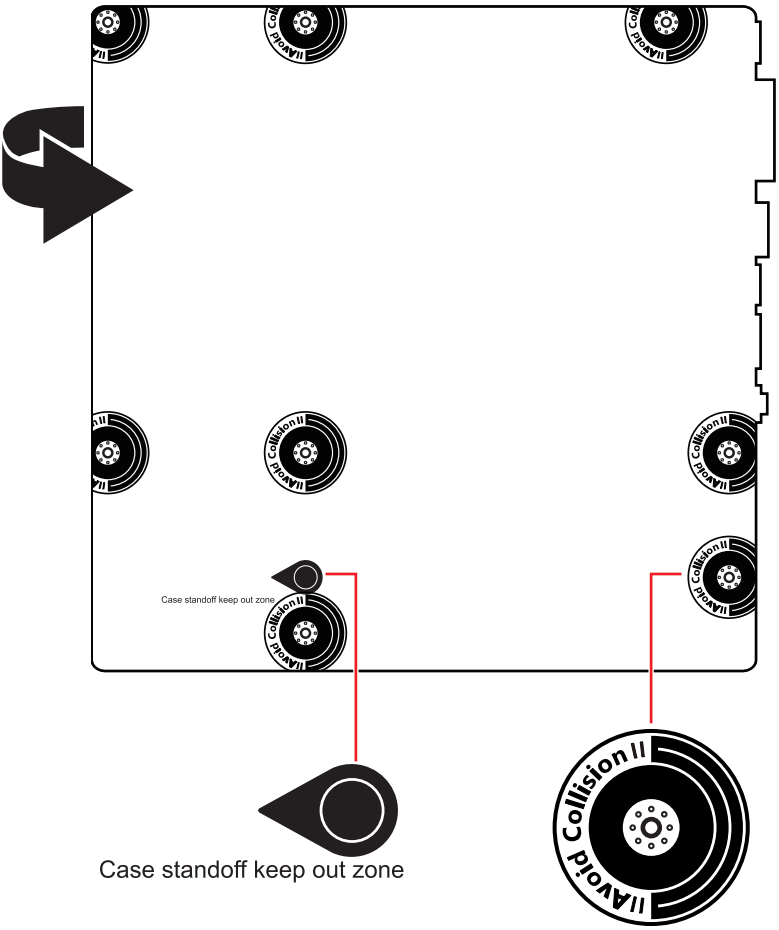


* The illustration above is for reference only and may vary from the motherboard you purchased.

# Installing a Processor

- https://youtu.be/Xv89nhFk1vc

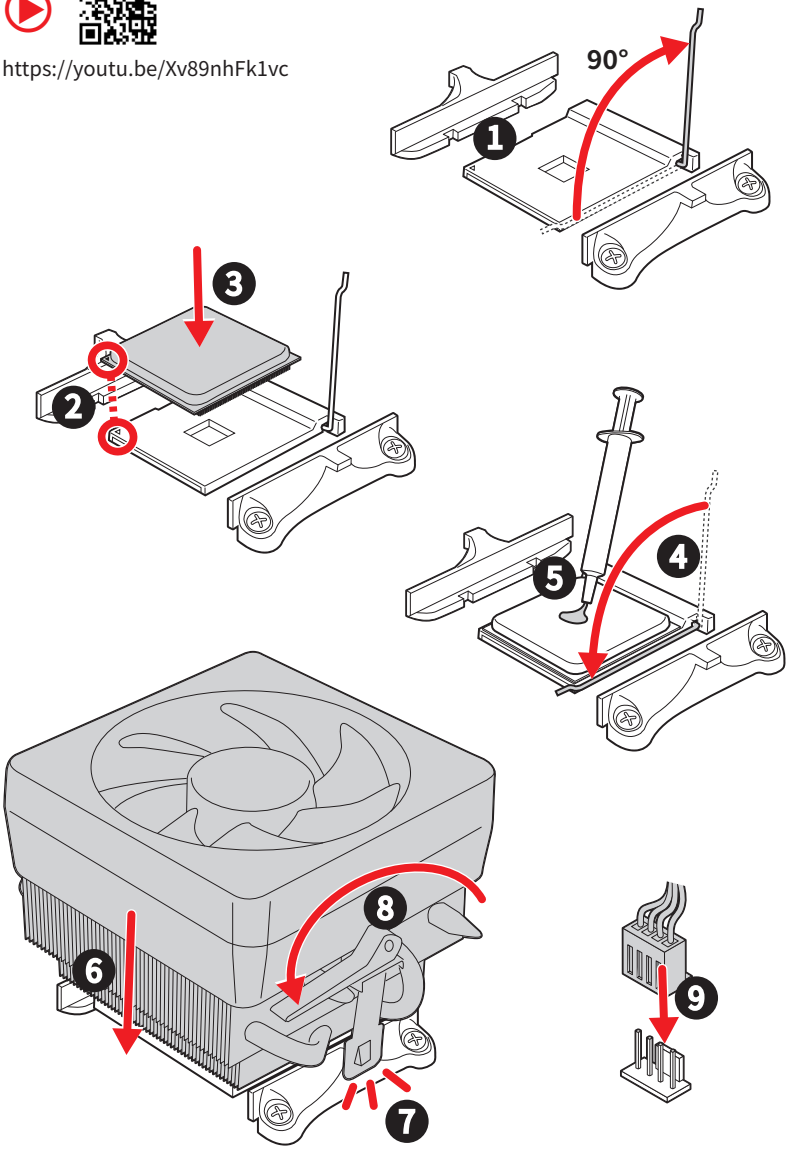


* Before installing the CPU, please ensure that the CPU socket lever is fully opened to the upright position.

***Important***

*If you are installing the screw-type CPU heatsink, please follow the figure below to remove the retention module first and then install the heatsink.*

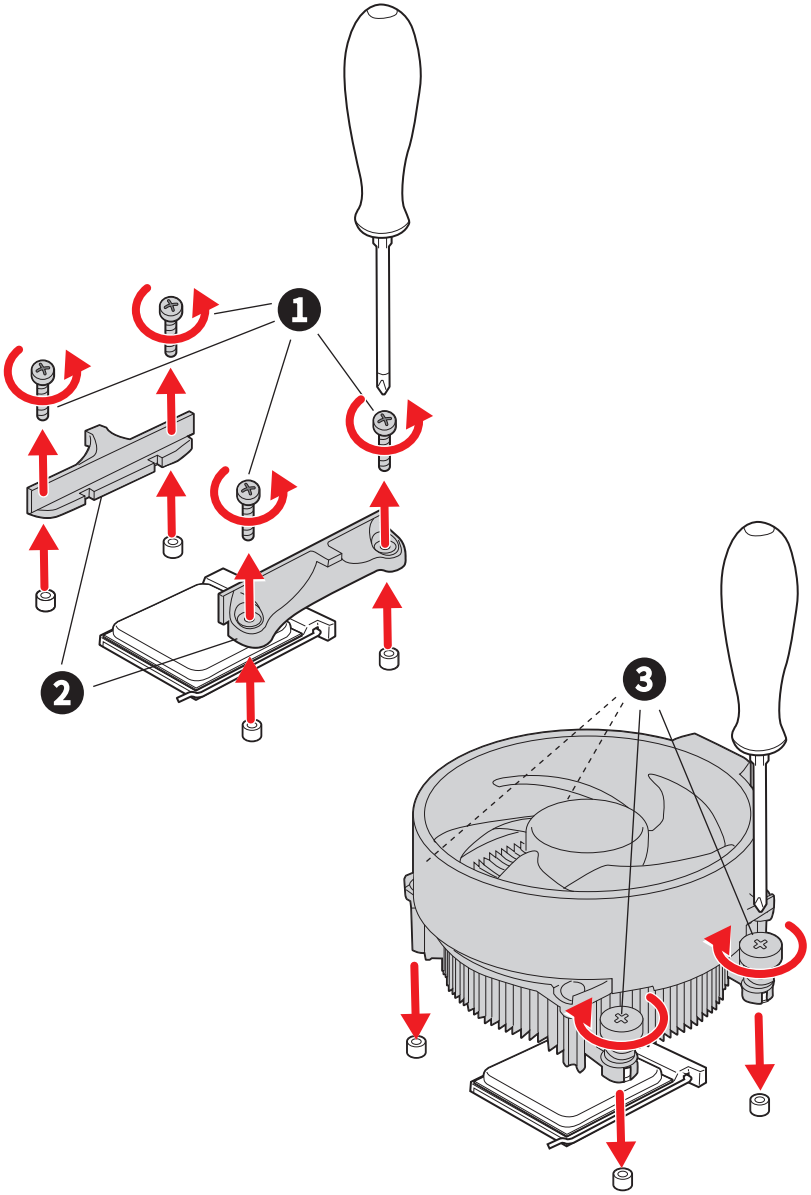

## Installing DDR4 memory

- https://msi.gm/SAA52039

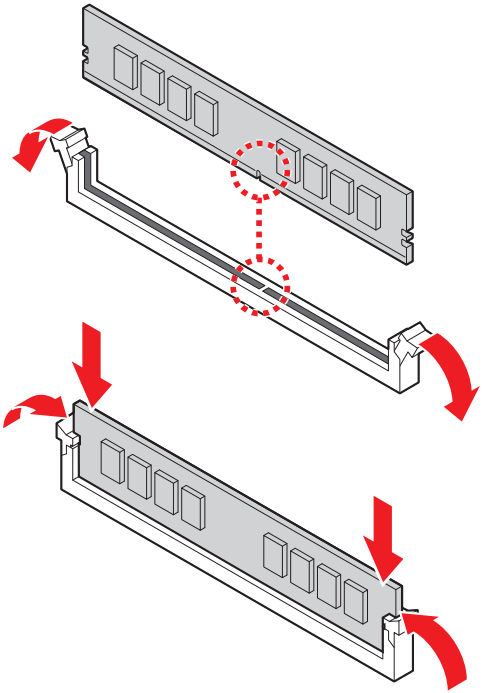

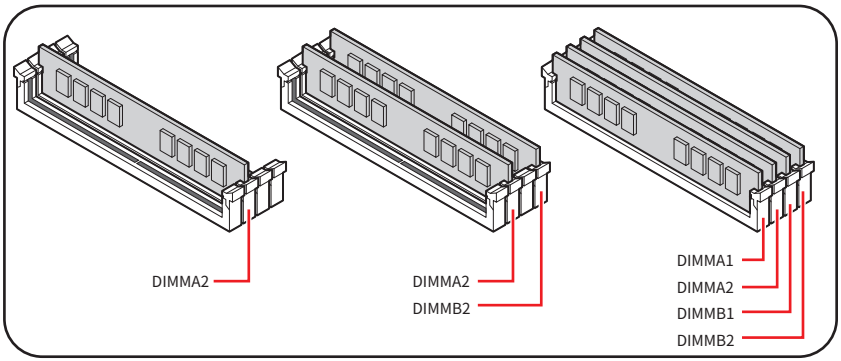

## Connecting the Front Panel Header

- https://msi.gm/S8EF7577

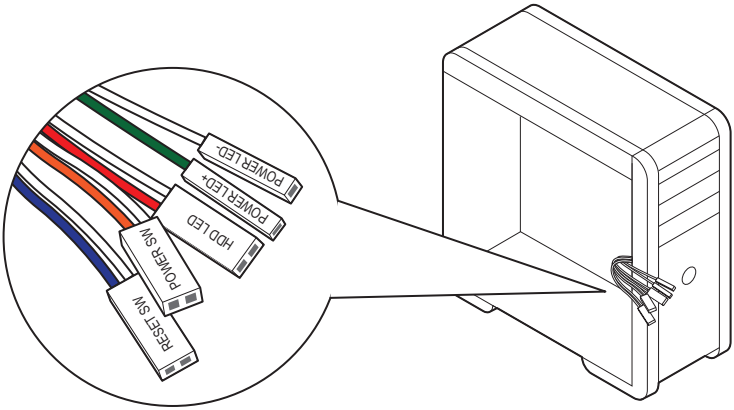


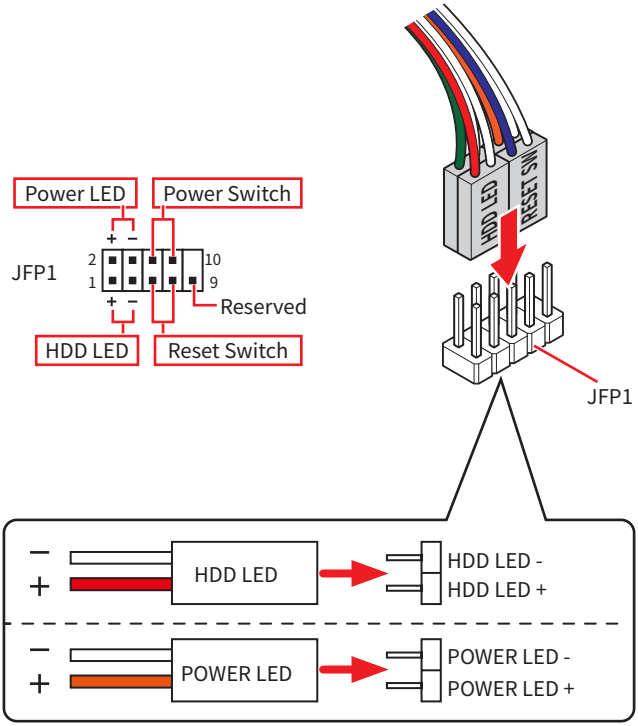

# Installing the Motherboard

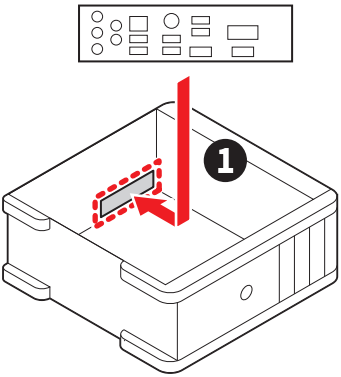


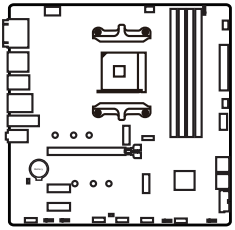

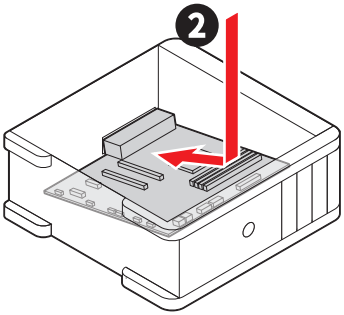


- https://msi.gm/S4BA9046

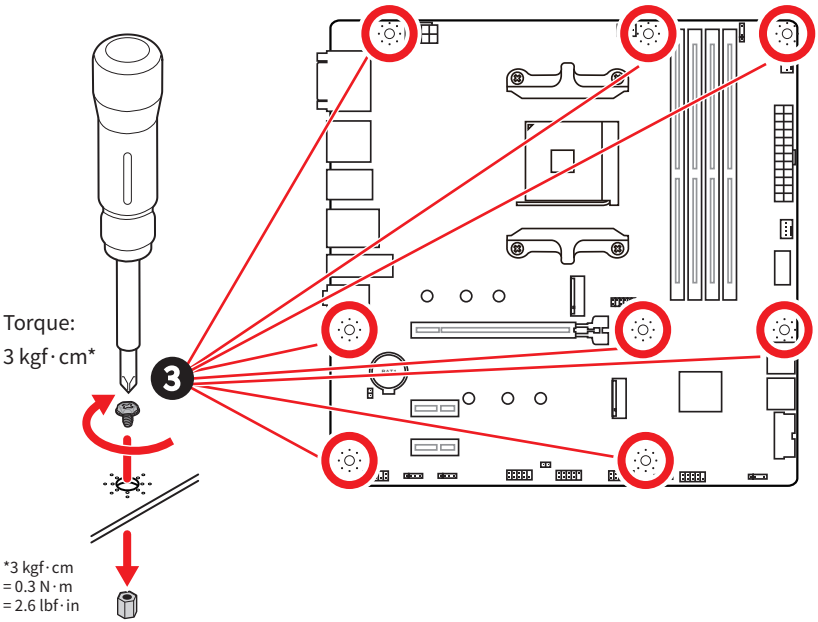

## Connecting the Power Connectors

- https://msi.gm/SD937E2C

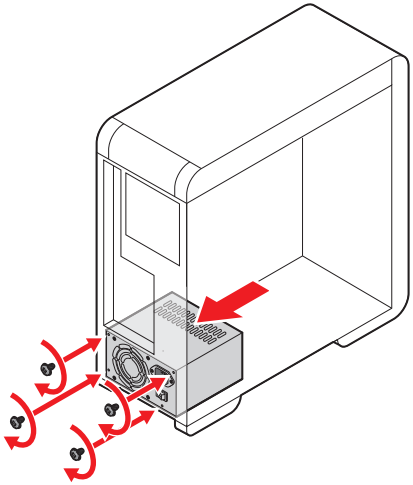

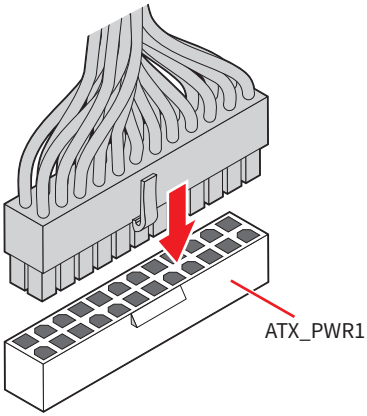


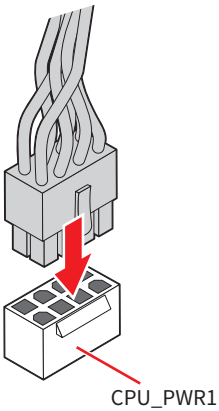

# Installing SATA Drives

- https://msi.gm/S9369131

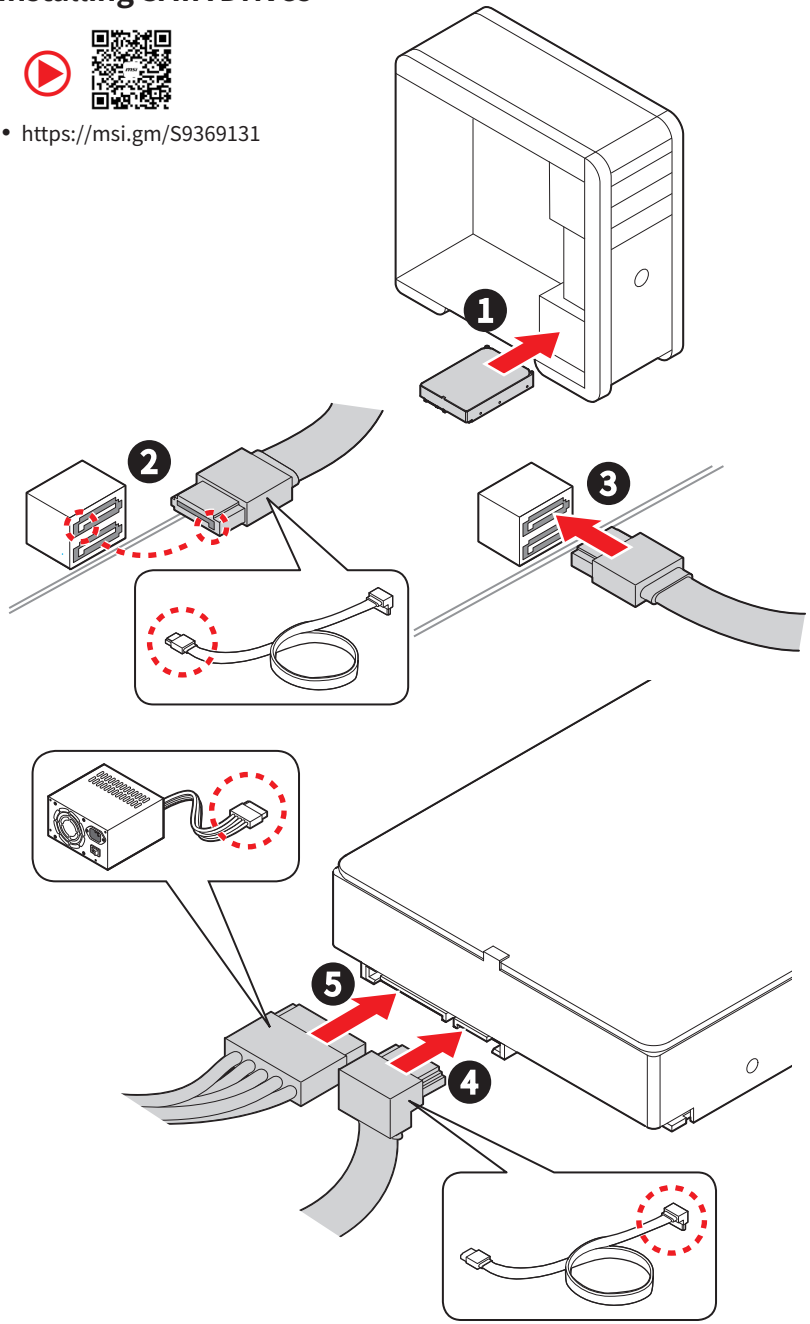

## Installing a Graphics Card

- https://msi.gm/SBC41FF1

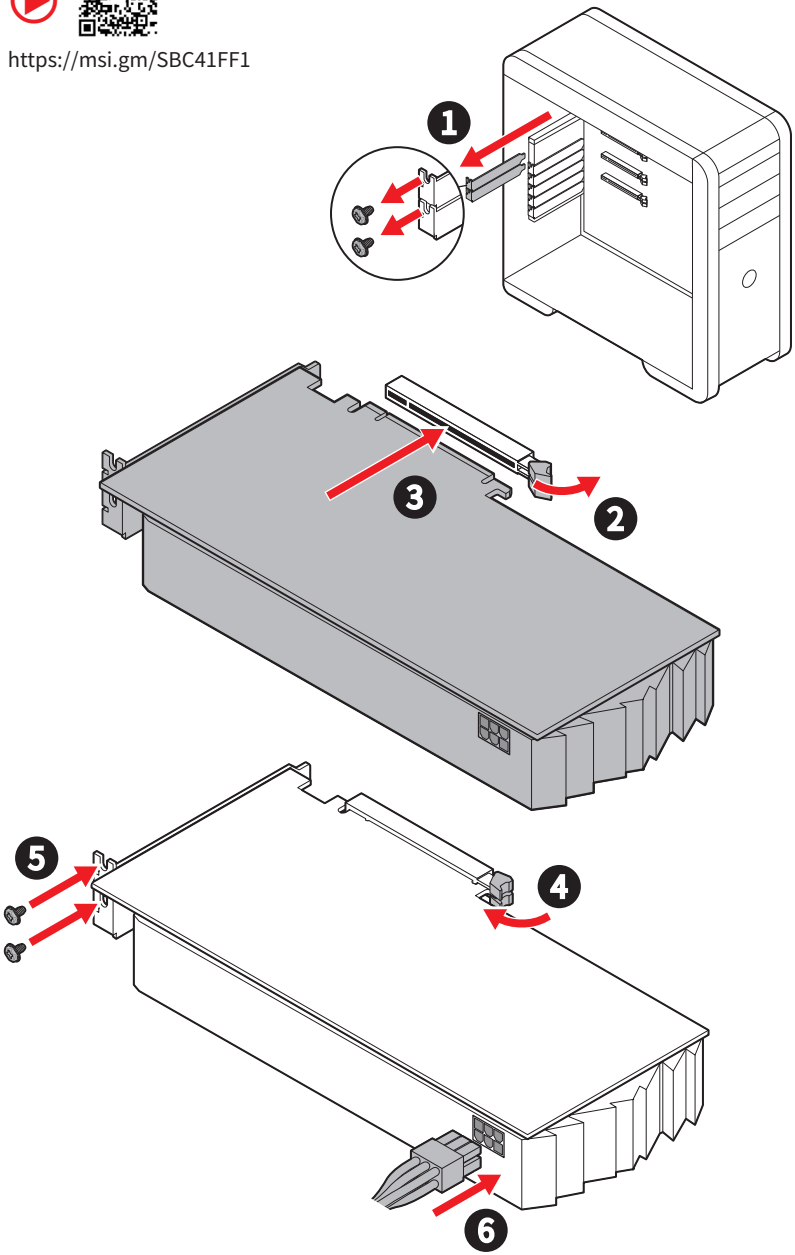

## Connecting Peripheral Devices

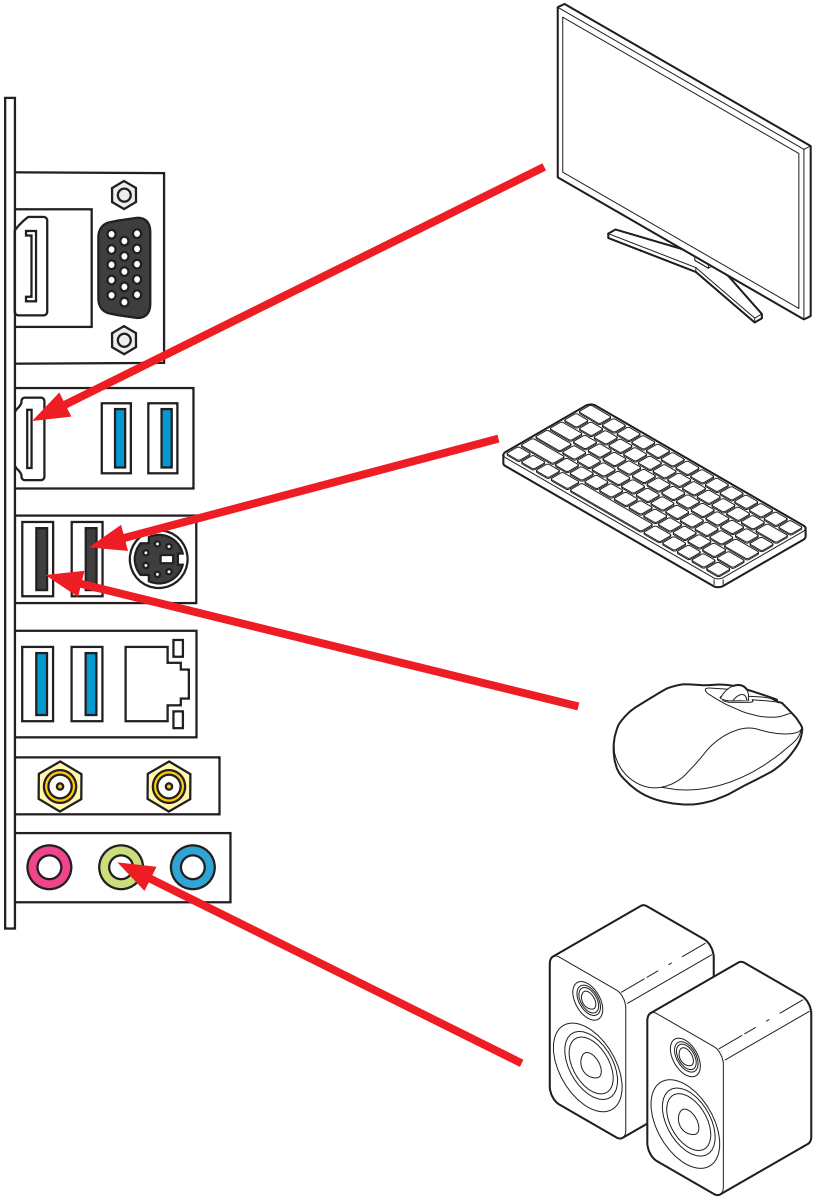

## Power On

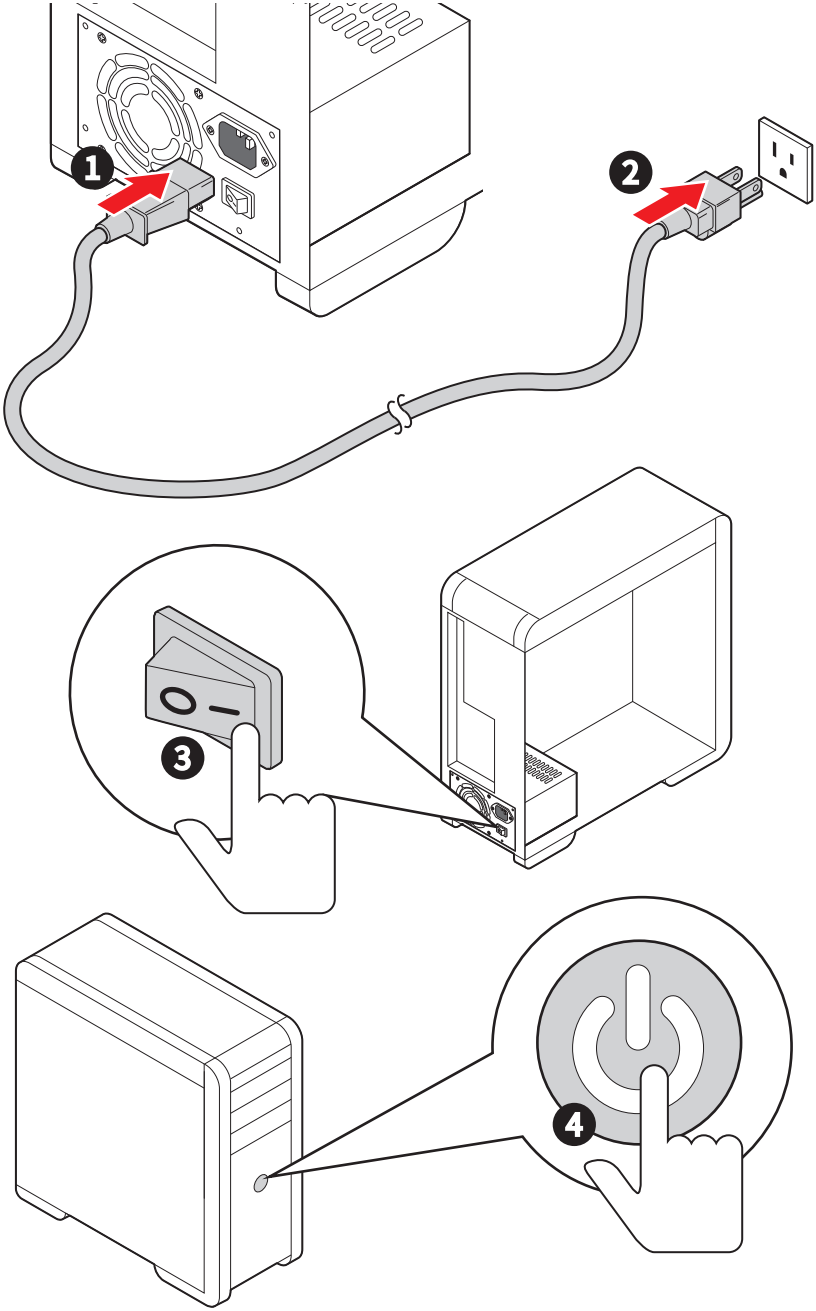

# Specifications

| | |
|---|---|
| **CPU** | • Supports AMD Ryzen™ 5000 Series, 5000 G-Series, 4000 G-Series, 3000 Series and 3000 G-Series processors<br>• Processor socket AM4<br>* Please go to www.msi.com to get the newest support status as new processors are released. |
| **Chipset** | AMD B550 Chipset |
| **Memory** | • 4x DDR4 memory slots*, supporting up to 128GB**<br>• Supports JEDEC Speed<br>• Supports Memory Overclocking by A-XMP OC mode<br>• Supports Dual-Channel mode<br>• Supports Non-ECC, Un-buffered memory<br>* The DIMM slots on this motherboard have double-sided latches.<br>** Memory compatibility and supported speeds can vary depending on the CPU and memory configuration. For detailed information, please refer to the Memory Compatibility List available on the product' s Support page or visit https://www.msi.com/support/. |
| **Expansion Slots** | • 1x PCIe x16 slot<br>  • PCI_E1 slot (From CPU)<br>  • Supports up to PCIe 4.0 x16/ 3.0 x16*<br>• 2x PCIe x1 slots<br>  • PCI_E2 & PCI_E3 slots (From B550 chipset)<br>  • Supports up to PCIe 3.0 x1<br>* The supported specification depends on installed processor. |
| **Onboard Graphics** | • 1x HDMI™ 2.1 port, supporting a maximum resolution of 4K 60Hz*/ **<br>• 1x DisplayPort 1.4 port with HBR2, supporting a maximum resolution of 4K 60Hz*/ **<br>• 1x VGA port, supports a maximum resolution of 2048x1536 60Hz, 1920x1200 60Hz*/**<br>* Available only on processors featuring integrated graphics.<br>** Graphics specifications may vary depending on the CPU installed. |
| **SATA Ports** | • 4x SATA 6Gb/s ports (From B550 chipset) |

Continued on next column

Continued from previous column

| | |
|---|---|
| **M.2 SSD Slots** | • 2x M.2 slots (Key M)<br>  • M2_1 slot (From CPU)<br>  • Supports up to PCIe 4.0 x4/ 3.0 x4*<br>  • Supports up to SATA 6Gb/s<br>  • Supports 2242/ 2260/ 2280 storage devices<br>  • M2_2 slot (From B550 chipset)<br>  • Supports up to PCIe 3.0 x4<br>  • Supports 2242/ 2260/ 2280 storage devices<br>* The supported specification depends on installed processor. |
| **RAID** | • Supports RAID 0, RAID 1 and RAID 10 for SATA storage devices<br>• Supports RAID 0 and RAID 1 for M.2 NVMe storage devices |
| **Audio** | Realtek® ALC897<br>• 7.1-Channel High Definition Audio |
| **LAN** | • 1x Realtek® RTL8111H 1Gbps LAN controller |
| **Wi-Fi & Bluetooth® (For PRO B550M-P WIFI6E only)** | Wi-Fi 6E<br>• The Wireless module is pre-installed in the M.2 (Key-E)slot<br>• Dual-band 1T1R mode<br>• Supports MU-MIMO RX<br>• Supports 2.4GHz/ 5GHz/ 6GHz* frequency band<br>• Supports 802.11 a/ b/ g/ n/ ac/ ax<br>• Supports Bluetooth® 5.3**<br>* The usage of Wi-Fi 6GHz band relies on Windows 11 support and may depend on every country' s regulations.<br>** The Bluetooth version may be updated, please refer to the Wi-Fi chipset vendor' s website for details. |
| **Power Connectors** | • 1x 24-pin ATX main power connector<br>• 1x 8-pin +12V power connector |
| **Internal USB Connectors** | • 1x USB 5Gbps Type-C® front panel port (From B550 chipset)<br>• 1x USB 5Gbps connector (From B550 chipset)<br>  • Support additional 2 USB 5Gbps ports<br>• 2x USB 2.0 connectors (From GL850)<br>  • Support additional 4 USB 2.0 ports |

Continued on next column

Continued from previous column

| | |
|---|---|
| **Fan Connectors** | • 1x 4-pin CPU fan connector<br>• 2x 4-pin system fan connectors |
| **System Connectors** | • 1x Front panel audio connector<br>• 2x System panel connectors<br>• 1x Chassis Intrusion connector<br>• 1x TPM module connector<br>• 1x Serial port connector |
| **Jumpers** | • 1x Clear CMOS jumper |
| **LED Features** | • 2x 4-pin RGB LED connectors<br>• 2x 3-pin A-RAINBOW V2 (ARGB Gen2) LED connectors<br>• 4x EZ Debug LED |
| **Back Panel Connectors & Others** | • 1x VGA port<br>• 1x DisplayPort<br>• 1x HDMI™ port<br>• 4x USB 5Gbps Type-A ports (From CPU)<br>• 1x PS/2 keyboard/ mouse combo port<br>• 2x USB 2.0 Type-A ports (From B550 chipset)<br>• 1x 1G LAN (RJ45) jack<br>• 2x Wi-Fi Antenna connectors (For PRO B550M-P WIFI6E only)<br>• 3x audio jacks |
| **I/O Controller** | NUVOTON NCT6687-R Controller Chip |
| **Hardware Monitor** | • CPU/ System/ Chipset temperature detection<br>• CPU/ System fan speed detection<br>• CPU/ System fan speed control |
| **Form Factor** | • Micro-ATX Form Factor<br>• 9.6 in. x 9.6 in. (244 mm x 244 mm) |
| **BIOS Features** | • 1x 256 Mb flash<br>• UEFI AMI BIOS<br>• ACPI 6.0, SMBIOS 2.8<br>• Multi-language |

Continued on next column

Continued from previous column

| | |
|---|---|
| **Software** | • Drivers<br>• MSI Center<br>• Acrobat<br>• Adobe Creative Cloud<br>• AIDA64 Extreme - MSI Edition<br>• CPU-Z MSI GAMING<br>• Dropbox<br>• Norton 360<br>• Voicemod<br>• MSI DigiME<br>• MSI Surfshark<br>• Google Play Games on PC |

# Special Features

**MSI Center**

- MSI AI Engine
- Cooling Wizard
- Mystic Light
- Ambient Link
- Frozr AI Cooling
- Hardware Monitoring
- Live Update
- MSI Companion
- System Diagnosis
- True Color
- User Scenario
- AI LAN Manager

**EZ DIY**

- PCI-E STEEL ARMOR II
- EZ Dubug LED

**Performance**

- Core Boost
- VRM Design
- Lightning Gen 4 PCI-E Slot
- Lightning Gen 4 M.2 Slot
- Front USB Type-C

**Audio**

- Audio Boost

**RGB Support**

- Mystic Light
- Mystic Light Extension (RGB)
- Mystic Light Extension (ARGB V2)
- Ambient Devices Support

**BIOS**

- Click BIOS 5

# Package Contents

Please check the contents of your motherboard package. It should contain:

**Board**

- 1x Motherboard

**Documentation**

- 1x Quick installation guide
- 1x European Union Regulatory Notices

**Cables**

- 1x SATA cable

**Accessories**

- 2x Wi-Fi antennas (For PRO B550M-P WIFI6E only)
- 2x M.2 screw and standoff packages (2 sets/pack)
- 1x I/O Shielding

***Important***

*If any of the above items are damaged or missing, please contact your retailer.*

# Back Panel Connectors

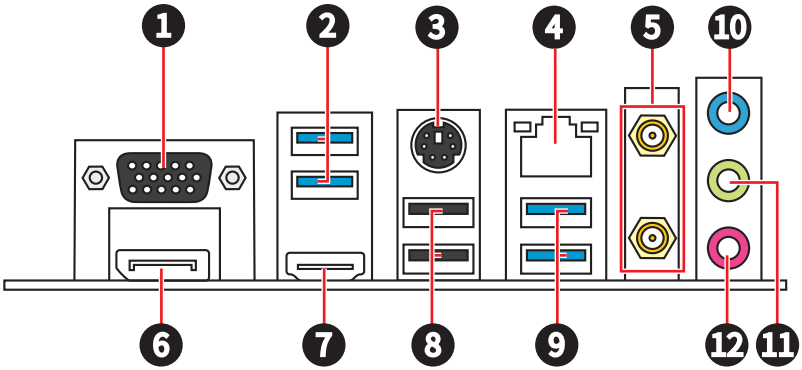


| Item | Description |
|---|---|
| 1 | VGA port |
| 2 | USB 5Gbps Type-A ports (From CPU) |
| 3 | PS/2 Combo port |
| 4 | 1Gbps LAN port |
| 5 | Wi-Fi Antenna connectors (For PRO B550M-P WIFI6E only) |
| 6 | DisplayPort |
| 7 | HDMI™ port |
| 8 | USB 2.0 Type-A ports (From B550 chipset) |
| 9 | USB 5Gbps Type-A ports (From CPU) |
| 10 | Line-in jack |
| 11 | Line-out jack |
| 12 | Mic-in jack |

## 1Gbps LAN Port LED Status Table

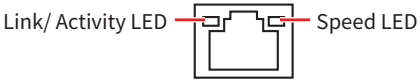


| Link/ Activity LED | | Speed LED | |
|---|---|---|---|
| **Status** | **Description** | **Status** | **Speed** |
| Off | No link | Off | 10 Mbps |
| Yellow blinking slowly | Linked | Green | 100 Mbps |
| Yellow blinking rapidly | Data activity | Orange | 1 Gbps |

## Audio Jacks Connection

### Audio jacks to headphone and microphone diagram

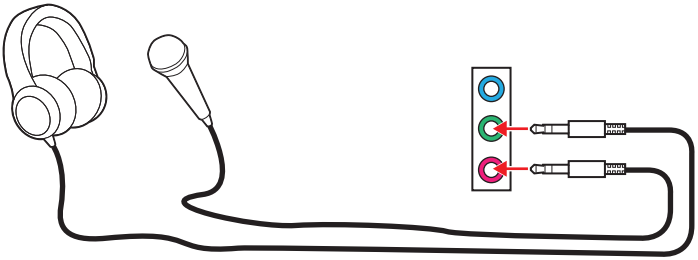

### Audio jacks to stereo speakers diagram

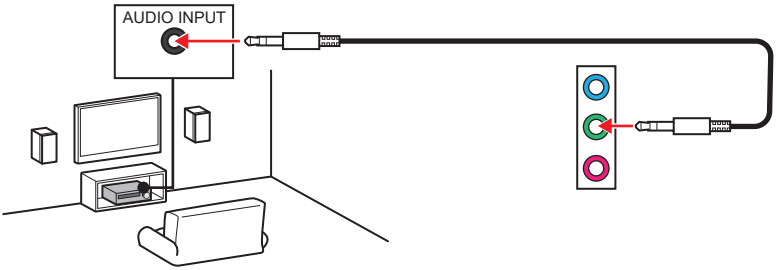

## Audio jacks to 4-channel speakers diagram

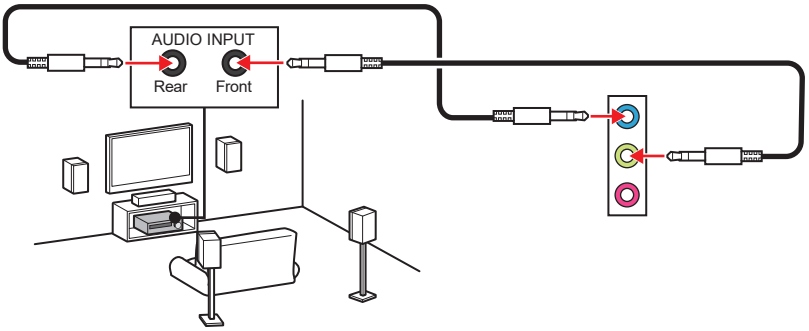


## Audio jacks to 5.1-channel speakers diagram

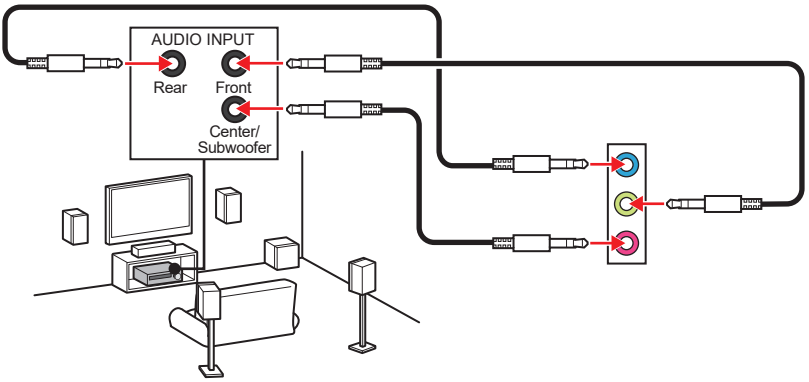


## Audio jacks to 7.1-channel speakers diagram

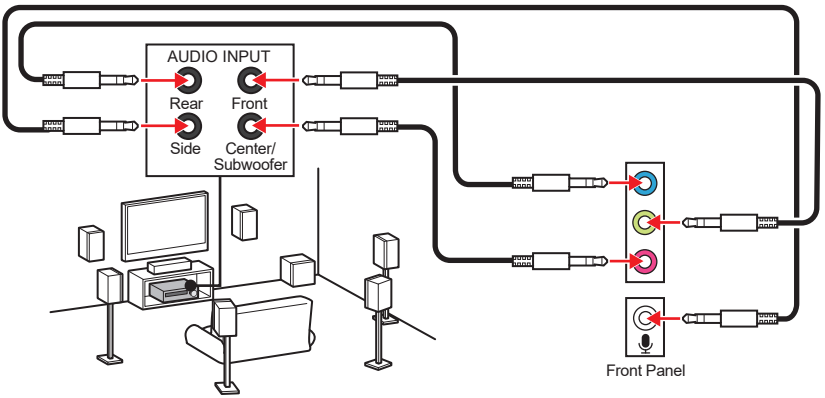

## Installing Antenna (For PRO B550M-P WIFI6E only)

1. Screw the antennas tight to the antenna connectors as shown below.
2. Orient the antennas.

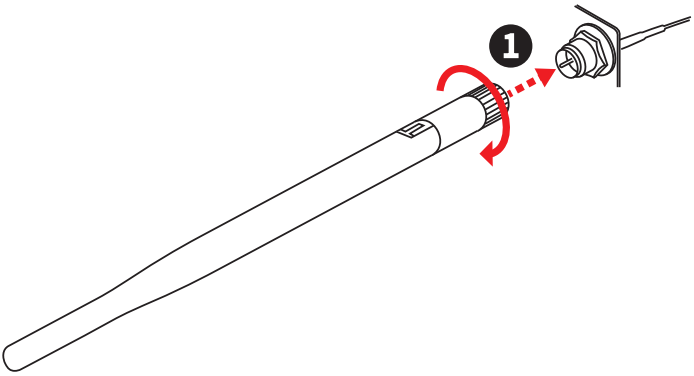


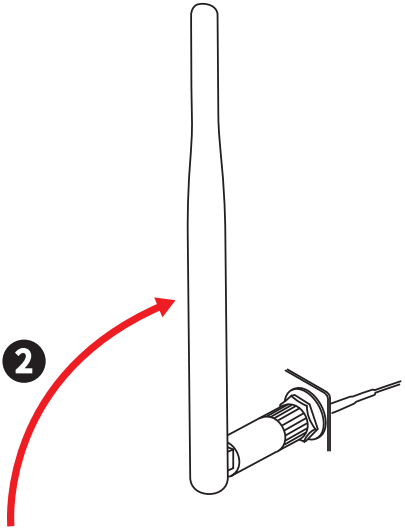

# Overview of Components

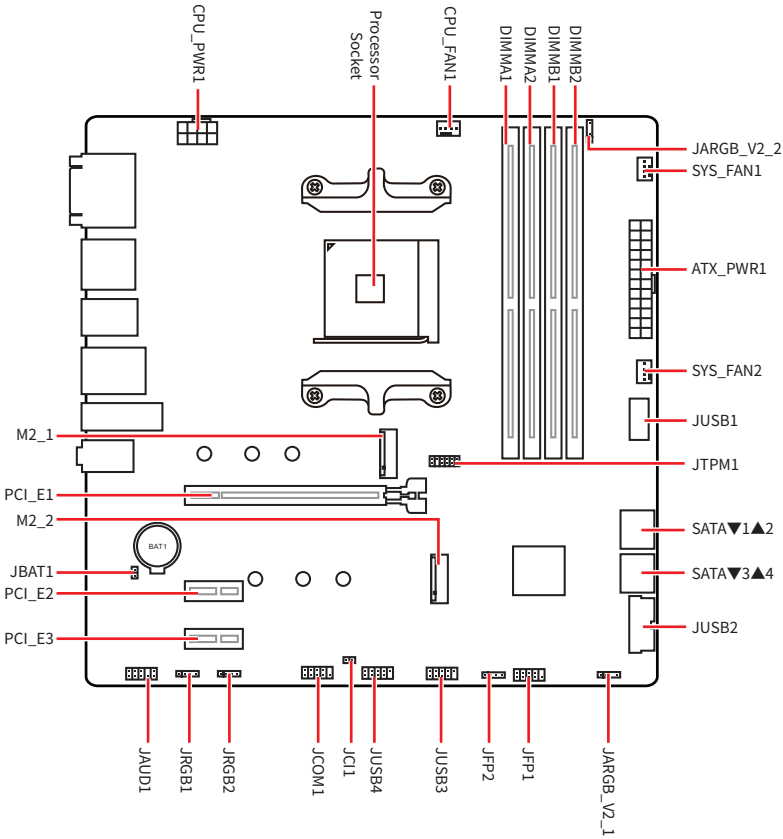

# Processor Socket

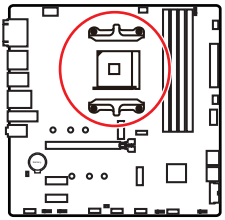

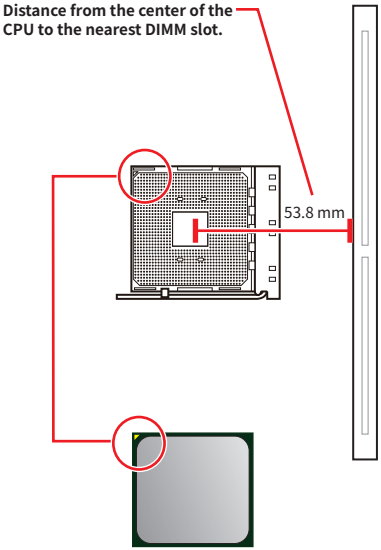


## Introduction to the AM4 CPU

The surface of the AM4 CPU has a yellow triangle to assist in correctly lining up the CPU for motherboard placement. The yellow triangle is the Pin 1 indicator.

***Important***

- *When changing the processor, the system configuration could be cleared and reset BIOS to default values, due to the AM4 processor' s architecture.*
- *Always unplug the power cord from the power outlet before installing or removing the CPU.*
- *When installing a CPU, always remember to install a CPU heatsink. A CPU heatsink is necessary to prevent overheating and maintain system stability.*
- *Confirm that the CPU heatsink has formed a tight seal with the CPU before booting your system.*
- *Overheating can seriously damage the CPU and motherboard. Always make sure the cooling fans work properly to protect the CPU from overheating. Be sure to apply an even layer of thermal paste (or thermal tape) between the CPU and the heatsink to enhance heat dissipation.*
- *If you purchased a separate CPU and heatsink/ cooler, Please refer to the documentation in the heatsink/ cooler package for more details about installation.*
- *This motherboard is designed to support overclocking. Before attempting to overclock, please make sure that all other system components can tolerate overclocking. Any attempt to operate beyond product specifications is not recommended. MSI® does not guarantee the damages or risks caused by inadequate operation beyond product specifications.*

## DIMM Slots

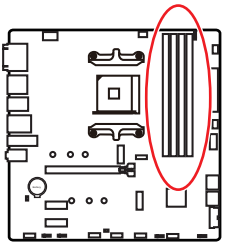

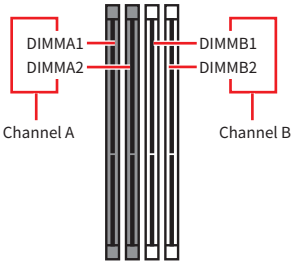


## Memory module installation recommendation

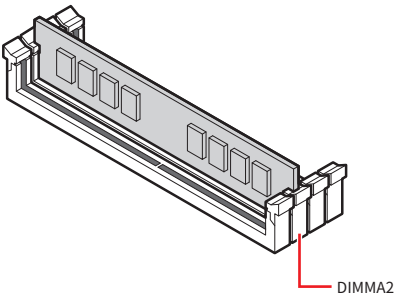


***Important***

*Always insert memory modules in the **DIMMA2** slot first.*

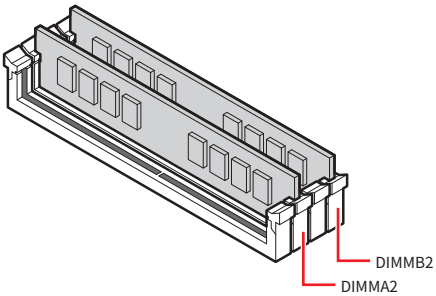


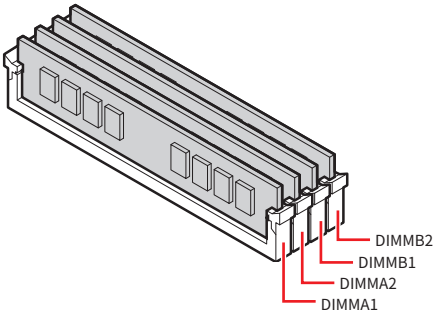


***Important***

- *Align the notch on the  module with the notch on the memory slot to ensure proper orientation. Do not force the module into the slot; it should slide in easily if properly aligned.*
- *To ensure system stability for Dual channel mode, memory modules must be of the same type, number and density.*
- *Some memory modules may operate at a lower frequency than the marked value when overclocking due to the memory frequency operates dependent on its Serial Presence Detect (SPD). Go to BIOS and find the* ***DRAM Frequency*** *to set the memory frequency if you want to operate the memory at the marked or at a higher frequency.*
- *It is recommended to use a more efficient memory cooling system for full DIMMs installation or overclocking.*
- *The stability and compatibility of installed memory module depend on installed CPU and devices when overclocking.*
- *Please refer to www.msi.com for more information on compatible memory.*

## PCI_E1~E3: PCIe Expansion Slot

PCI Express (PCIe) expansion slot is used to connect add-on card to the motherboard. These cards can provide additional functionality to your computer, such as graphics, networking, or storage.

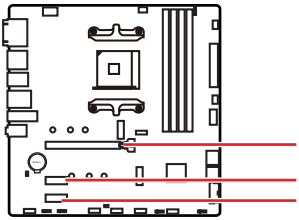

**PCI_E1**: PCIe 4.0 x16 (From CPU)
**PCI_E2**: PCIe 3.0 x1 (From Chipset)
**PCI_E3**: PCIe 3.0 x1 (From Chipset)

***Important***

- *PCI_E1 speed and bandwidth varies depending on the installed processor.*
- *If you install a large and heavy graphics card, you need to use a tool such as **MSI Graphics Card Bolster** to support its weight to prevent deformation of the slot.*
- *When adding or removing expansion cards, always turn off the power supply and unplug the power supply power cable from the power outlet. Read the expansion card' s documentation to check for any necessary additional hardware or software changes.*

# M2_1~2: M.2 Slots (Key M)

The M.2 slot is a small, high-speed expansion slot on a motherboard. It can be used to connect an M.2 SSD, which is a type of solid-state drive that offers faster performance than traditional SATA SSDs.

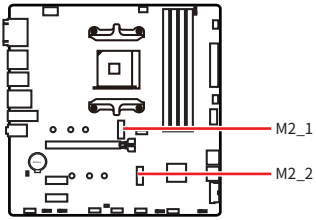


***Important***

*If your M.2 SSD equips its own heatsink, please note the following:*

- *Remove the M.2 plate or rubber cube in the M.2 slot before installing M.2 SSD. Do not re-install the heatsink supplied with the motherboard.*
- *Ensure that the M.2 SSD heatsink you use fits the size limits to prevent damage.*

### M.2 SSD Heatsink Size Restrictions

If you need to purchase an additional heatsink, please refer to the diagram below to confirm the M.2 installation space dimensions. Please also consider the height of the installed PCIe expansion card when determining M.2 installation space.

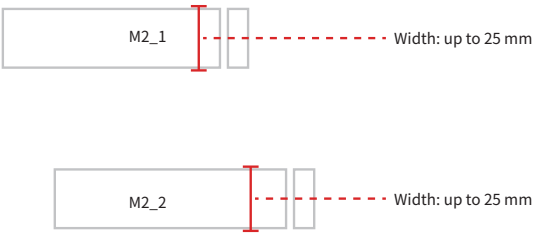

## Installing M.2 module into M.2 slot

1. Please install the supplied M.2 standoff in the M.2 slot according to your SSD length.
2. Insert your M.2 SSD into the M.2 slot at a 30-degree angle.
3. Secure the M.2 SSD in place with the supplied M.2 screw.

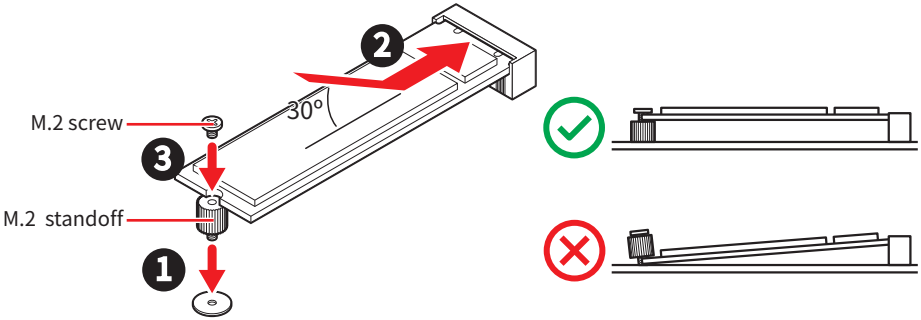

## SATA1~4: SATA 6Gb/s Connectors

These connectors are SATA 6Gb/s interface ports. Each connector can connect to one SATA device.

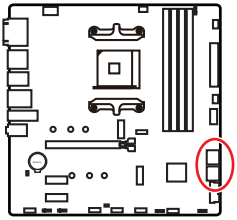

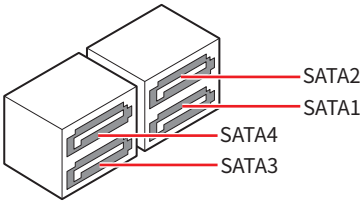


***Important***

- *Please do not fold the SATA cable at a 90-degree angle. Data loss may result during transmission otherwise.*
- *SATA cables have identical plugs on either sides of the cable. However, it is recommended that the flat connector be connected to the motherboard for space saving purposes.*

## JAUD1: Front Audio Connector

This connector allows you to connect audio jacks on the front panel.

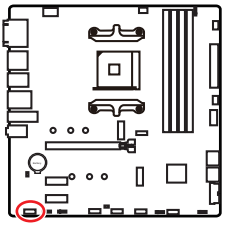

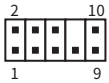


| Pin | Signal Name | Pin | Signal Name |
|---|---|---|---|
| 1 | MIC L | 2 | Ground |
| 3 | MIC R | 4 | NC |
| 5 | Head Phone R | 6 | MIC Detection |
| 7 | SENSE_SEND | 8 | No Pin |
| 9 | Head Phone L | 10 | Head Phone Detection |

## JFP1, JFP2: Front Panel Connectors

The JFP1 connector controls the power on, power reset, and the LEDs on your PC case/ chassis. Power Switch/ Reset Switch headers allow you to connect power button/ reset button. Power LED header connects to LED light on the PC case, and HDD LED header indicates the activity of the hard disk. The JFP2 connector is for Buzzer and Speaker. For connecting the cables from your PC case to the correct pins on the motherboard, please refer to the following images.

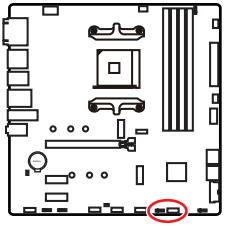

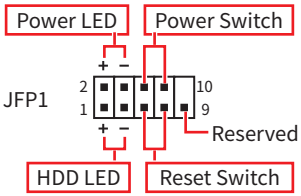


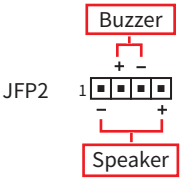


***Important***

*Make sure to connect the Power LED and HDD LED cables to the corresponding positive and negative pins on the motherboard. Otherwise, the LEDs will not function properly.*

# CPU_PWR1, ATX_PWR1: Power Connectors

These power connectors allow you to connect an ATX power supply.

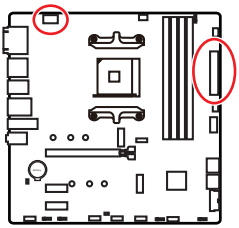

CPU_PWR1

| Pin | Signal Name | Pin | Signal Name |
|---|---|---|---|
| 1 | Ground | 2 | Ground |
| 3 | Ground | 4 | Ground |
| 5 | +12V | 6 | +12V |
| 7 | +12V | 8 | +12V |

ATX_PWR1

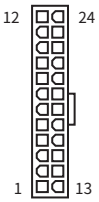


| Pin | Signal Name | Pin | Signal Name |
|---|---|---|---|
| 1 | +3.3V | 2 | +3.3V |
| 3 | Ground | 4 | +5V |
| 5 | Ground | 6 | +5V |
| 7 | Ground | 8 | PWR OK |
| 9 | 5VSB | 10 | +12V |
| 11 | +12V | 12 | +3.3V |
| 13 | +3.3V | 14 | -12V |
| 15 | Ground | 16 | PS-ON# |
| 17 | Ground | 18 | Ground |
| 19 | Ground | 20 | Res |
| 21 | +5V | 22 | +5V |
| 23 | +5V | 24 | Ground |

***Important***

*Make sure that all the power cables are securely connected to a proper ATX power supply to ensure stable operation of the motherboard.*

## JCI1: Chassis Intrusion Connector

This connector allows you to connect the chassis intrusion switch cable.

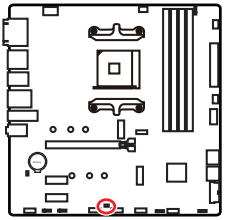

Normal
(default)

Trigger the chassis
intrusion event

### Using chassis intrusion detector

1. Connect the **JCI1** connector to the chassis intrusion switch/ sensor on the chassis.
2. Close the chassis cover.
3. Go to **BIOS > SETTINGS > Security > Chassis Intrusion Configuration.**
4. Set **Chassis Intrusion** to **Enabled**.
5. Press **F10** to save and exit and then press the **Enter** key to select **Yes**.
6. Once the chassis cover is opened again, a warning message will be displayed on screen when the computer is turned on.

### Resetting the chassis intrusion warning

1. Go to **BIOS > SETTINGS > Security > Chassis Intrusion Configuration.**
2. Set **Chassis Intrusion** to **Reset**.
3. Press **F10** to save and exit and then press the Enter key to select **Yes**.

## JCOM1 : Serial Port connector

This connector allows you to connect the optional serial port with bracket.

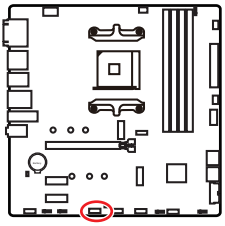

| Pin | Signal Name | Pin | Signal Name |
|---|---|---|---|
| 1 | DCD | 2 | SIN |
| 3 | SOUT | 4 | DTR |
| 5 | Ground | 6 | DSR |
| 7 | RTS | 8 | CTS |
| 9 | RI | 10 | No pin |

## JUSB1: USB Type-C® Front Panel Connector

This USB connector allows you to connect to the USB Type-C® ports on the front panel and support data transfer speeds of up to 5Gbps. It features a user-friendly design that ensures proper orientation when connecting the cable.

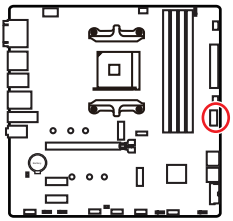

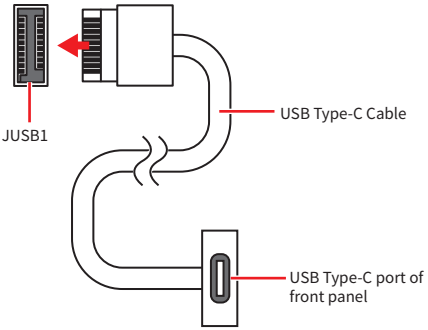


## JUSB2: USB 5Gbps Connector

This USB connector allows you to connect to USB ports on the chassis panel and supports data transfer speeds of up to 5Gbps.

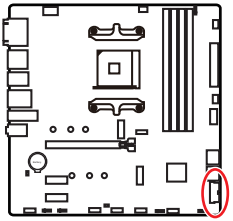

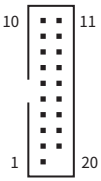


| Pin | Signal Name | Pin | Signal Name |
|---|---|---|---|
| 1 | Power | 2 | USB3_RX_DN |
| 3 | USB3_RX_DP | 4 | Ground |
| 5 | USB3_TX_C_DN | 6 | USB3_TX_C_DP |
| 7 | Ground | 8 | USB2.0- |
| 9 | USB2.0+ | 10 | Ground |
| 11 | USB2.0+ | 12 | USB2.0- |
| 13 | Ground | 14 | USB3_TX_C_DP |
| 15 | USB3_TX_C_DN | 16 | Ground |
| 17 | USB3_RX_DP | 18 | USB3_RX_DN |
| 19 | Power | 20 | No Pin |

***Important***

*Note that the Power and Ground pins must be connected correctly to avoid possible damage.*

## JUSB3~4: USB 2.0 Connectors

These connectors enable the connection of front-panel USB ports supporting speeds of up to 480 Mbit/s.

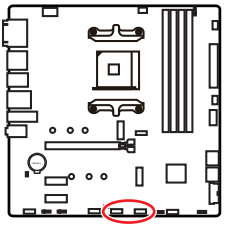

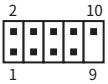


| Pin | Signal Name | Pin | Signal Name |
|---|---|---|---|
| 1 | VCC | 2 | VCC |
| 3 | USB0- | 4 | USB1- |
| 5 | USB0+ | 6 | USB1+ |
| 7 | Ground | 8 | Ground |
| 9 | No Pin | 10 | NC |

***Important***

- *Note that the VCC and Ground pins must be connected correctly to avoid possible damage.*
- *In order to recharge your iPad, iPhone and iPod through USB ports, please install MSI Center utility.*

## JTPM1: TPM Module Connector

This connector is designed for a Trusted Platform Module (TPM) to enable secure storage of sensitive data and perform cryptographic operations that ensure the integrity of your system.

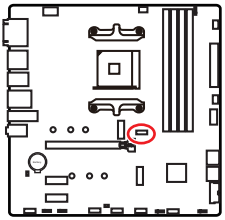

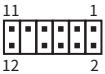


| Pin | Signal Name | Pin | Signal Name |
|---|---|---|---|
| 1 | SPI Power | 2 | SPI Chip Select |
| 3 | Master In Slave Out (SPI Data) | 4 | Master Out Slave In (SPI Data) |
| 5 | Reserved | 6 | SPI Clock |
| 7 | Ground | 8 | SPI Reset |
| 9 | Reserved | 10 | No Pin |
| 11 | Reserved | 12 | Interrupt Request |

***Important***

*The TPM module is not included and must be purchased separately.*

## CPU_FAN1, SYS_FAN1~2: Fan Connectors

Fan connectors can be divided into two categories: PWM Mode and DC Mode. PWM Mode fan connectors provide a constant 12V output and adjust fan speed with a speed control signal. DC Mode fan connectors control fan speed by changing voltage. Please refer to the following specification table for the fan connector mode of your motherboard.

You can control fans in **BIOS> HARDWARE MONITOR** panel. Enabling Smart Fan Mode will regulate fan speed based on CPU or system temperature. Disabling Smart Fan Mode will set the fan to full speed.

***Important***

*You can set DC or PWM in **HARDWARE MONITOR** panel to your fan type if your motherboard supports it. Make sure fans are working properly after switching the PWM/ DC mode.*

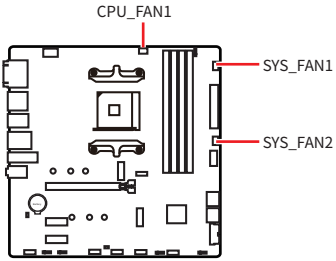

PWM Mode pin definition

| Pin | Signal Name | Pin | Signal Name |
|---|---|---|---|
| 1 | Ground | 2 | +12V |
| 3 | Sense | 4 | Speed Control Signal |

DC Mode pin definition

| Pin | Signal Name | Pin | Signal Name |
|---|---|---|---|
| 1 | Ground | 2 | Voltage Control |
| 3 | Sense | 4 | NC |

Fan specifications for fan connectors

| Connector | Fan mode | Max. current | Max. power |
|---|---|---|---|
| CPU_FAN1 | Auto mode | 2A | 24W |
| SYS_FAN1~2 | DC mode | 1A | 12W |

***Important***

*The auto mode fan connectors can automatically detect PWM and DC modes.*

# JBAT1: Clear CMOS (Reset BIOS) Jumper

There is CMOS memory onboard that is external powered from a battery located on the motherboard to save system configuration data. If you want to clear the system configuration, set the jumpers to clear the CMOS memory.

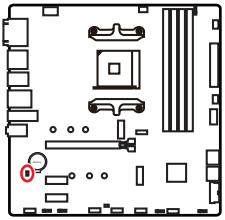

Keep Data
(default)

Clear CMOS/
Reset BIOS

## Resetting BIOS to default values

1. Power off the computer and unplug the power cord.
2. Use a jumper cap to short **JBAT1** for about 5-10 seconds.
3. Remove the jumper cap from **JBAT1**.
4. Plug the power cord and Power on the computer.

## JRGB1~2: RGB LED connectors

The JRGB connectors allow you to connect the 5050 RGB LED strips 12V.

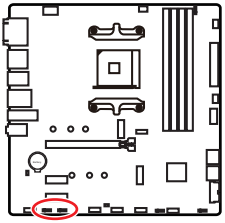

| Pin | Signal Name | Pin | Signal Name |
|---|---|---|---|
| 1 | +12V | 2 | G |
| 3 | R | 4 | B |

## RGB LED Strip Connection

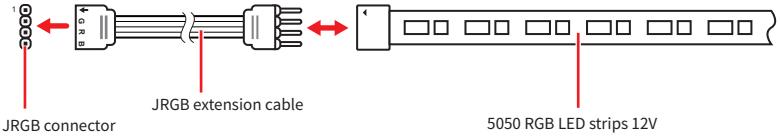


## RGB LED Fan Connection

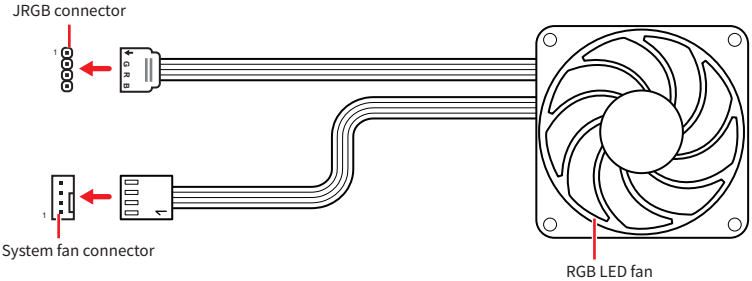


### *Important*

- *The JRGB connector supports up to 2 meters continuous 5050 RGB LED strips (12V/G/R/B) with the maximum power rating of 3A (12V).*
- *Always turn off the power supply and unplug the power cord from the power outlet before installing or removing the RGB LED strip.*
- *Please use MSI' s software to control the extended LED strip.*

## JARGB_V2_1~2: A-RAINBOW V2 (ARGB Gen2) LED connectors

The JARGB_V2 connectors allow you to connect the ARGB Gen2 and the ARGB-based LED strips. The JARGB_V2 connector supports up to 180 individually addressable RGB LEDs with maximum power rating of 3A (5V).

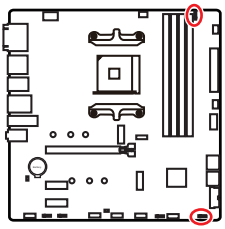

| Pin | Signal Name | Pin | Signal Name |
|---|---|---|---|
| 1 | +5V | 2 | Data |
| 3 | No Pin | 4 | Ground |

### Addressable RGB LED Strip Connection

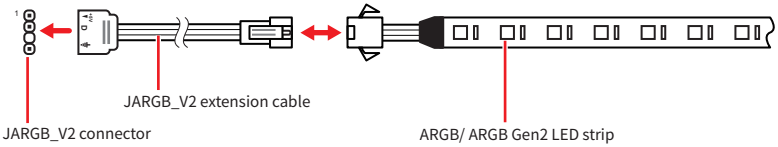


### Addressable RGB LED Fan Connection

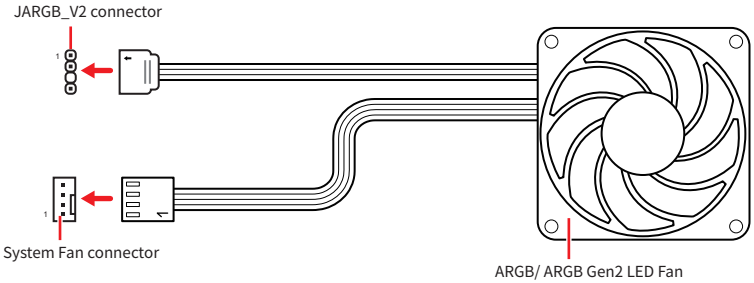


***CAUTION***

*Do not connect the wrong type of LED strips. The JRGB connector and the JARGB_V2 connector provide different voltages, and connecting the ARGB 5V LED strip to the JRGB connector will result in damage to the LED strip.*

***Important***

- *If you connect the ARGB Gen1 and ARGB Gen2 LED strips into the same connector, it may cause some issues. Please do not mix the ARGB Gen1 LED and the ARGB Gen2 LED strips together.*
- *It is recommended that you install LED strips with the same specification to achieve the best effects.*
- *Always turn off the power supply and unplug the power cord from the power outlet before installing or removing the addressable RGB LED strip.*
- *Please use MSI' s software to control the extended LED strip.*

# Onboard LEDs

## EZ Debug LED

These LEDs indicate the debug status of the motherboard.

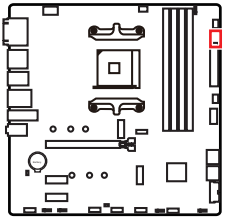

- **CPU** - indicates CPU is not detected or fail.
- **DRAM** - indicates DRAM is not detected or fail.
- **VGA** - indicates GPU/ PCIE/ M.2 is not detected or fail.
- **BOOT** - indicates the booting device is not detected or fail.

# Installing OS, Drivers & MSI Center

Please download and update the latest utilities and drivers at www.msi.com

## Installing Windows 11

1. Power on the computer.
2. Insert the Windows 11 installation disc/ USB into your computer.
3. Press the **Restart** button on the computer case.
4. Press **F11** key during the computer POST (Power-On Self Test) to get into Boot Menu.
5. Select the Windows 11 installation disc/USB from the Boot Menu.
6. Press any key if screen shows **Press any key to boot from CD or DVD...** message. If not, please skip this step.
7. Follow the instructions on the screen to install Windows 11.

## Installing Drivers with MSI Driver Utility Installer

***Important***

- *Some new network chips have not been natively supported by Windows 11. It is recommended that the **LAN driver** be installed before installing drivers with MSI Driver Utility Installer. Please refer to www.msi.com to install the LAN driver for your motherboard.*
- *The MSI Driver Utility Installer will only pop up once. If you cancel or close it during the process, please refer to the Live Update chapter of the MSI Center manual to install the drivers. You can also go to www.msi.com to search your motherboard and download the drivers.*
- *MSI Driver Utility Installer needs to be installed over the internet.*

1. Start up your computer in Windows 11.
2. Select **Start** > **Settings** > **Windows Update**, and then select **Check** for updates.
3. MSI Driver Utility Installer will pop up automatically.

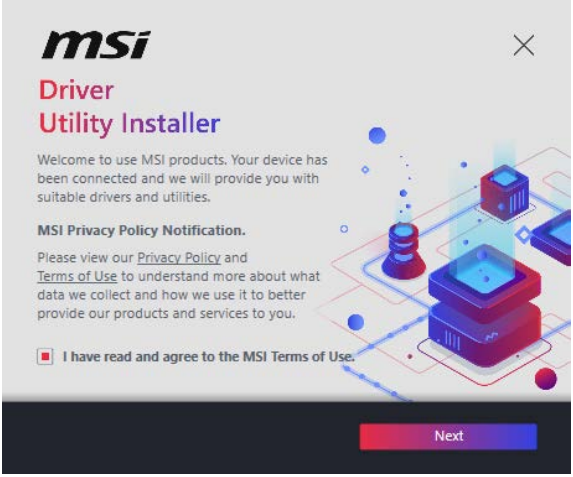


4. Select the **I have read and agree to the MSI Terms of Use** check box, and then click Next.

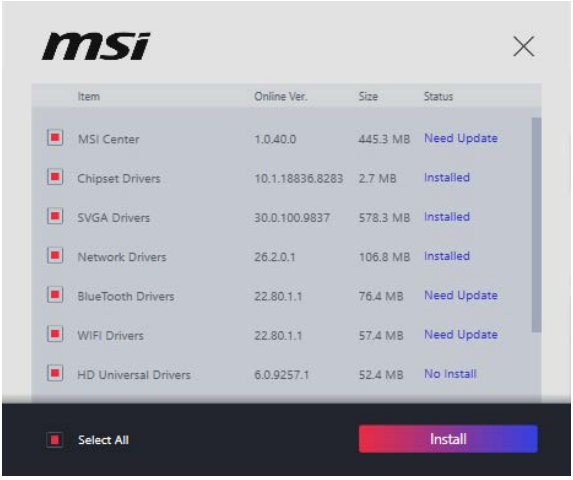


5. Check the **Select All** checkbox in the lower-left corner and click **Install** to install MSI Center and drivers. The installation progress will be shown at the bottom.

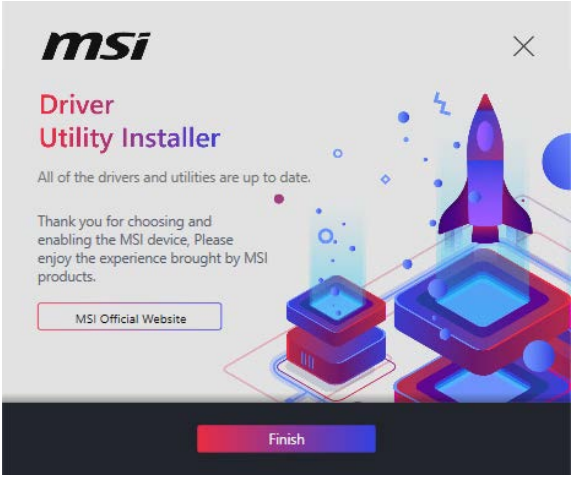


6. Once the progress has completed, click **Finish**.

# MSI Center

MSI Center is an application that helps you easily optimize game settings and smoothly use content creation softwares. It also allows you to control and synchronize LED light effects on PCs and other MSI products. With MSI Center, you can customize ideal modes, monitor system performance, and adjust fan speed.

## MSI Center User Guide

If you would like to know more information about MSI Center, please refer to https://msi.gm/S391169E

or scan the QR code to access.

***Important***

*Functions may vary depending on the product you have.*

# UEFI BIOS

MSI UEFI BIOS is compatible with UEFI (Unified Extensible Firmware Interface) architecture. UEFI has many new functions and advantages that traditional BIOS cannot achieve, and it will completely replace BIOS in the future. The MSI UEFI BIOS uses UEFI as the default boot mode to take full advantage of the new chipset' s capabilities. However, it still has a CSM (Compatibility Support Module) mode to be compatible with older devices. That allows you to replace legacy devices with UEFI compatible devices during the transition.

***Important***

*The term BIOS in this user guide refers to UEFI unless otherwise noted.*

## UEFI advantages

- Fast booting - UEFI can directly boot the operating system and save the BIOS self-test process. And also eliminates the time to switch to CSM mode during POST.
- Supports for hard drive partitions larger than 2 TB.
- Supports more than 4 primary partitions with a GUID Partition Table (GPT).
- Supports unlimited number of partitions.
- Supports full capabilities of new devices - new devices may not provide backward compatibility.
- Supports secure startup - UEFI can check the validity of the operating system to ensure that no malware tampers with the startup process.

## Incompatible UEFI cases

- **32-bit Windows operating system** - this motherboard supports only Windows 11 64-bit operating system.
- **Older graphics card** - the system will detect your graphics card. If you use older graphics cards, it may display a warning message **There is no GOP (Graphics Output protocol) support detected in this graphics card**.

***Important***

*We recommend that you replace it with a graphics card supporting GOP/UEFI or use CPU with integrated graphics for having normal function.*

## How to check the BIOS mode?

1. Power on your computer.
2. Press **Delete** key when the **Press DEL key to enter Setup Menu, F11 to enter Boot Menu** message appears on the screen during the boot process.
3. After entering the BIOS, you can check the **BIOS Mode** at the top of the screen.

BIOS Mode: CSM/**UEFI**

# BIOS Setup

The default settings offer the optimal performance for system stability in normal conditions. You should **always keep the default settings** to avoid possible system damage or failure booting unless you are familiar with BIOS.

***Important***

- *BIOS items are continuously updated for better system performance. Therefore, the description may be slightly different from the latest BIOS and should be for reference only. You could also refer to the **HELP** information panel in BIOS.*
- *The BIOS screens, options and settings will vary depending on the products you have.*

## Entering BIOS Setup

Press **Delete** key when the **Press DEL key to enter Setup Menu, F11 to enter Boot Menu** message appears on the screen during the boot process.

**Function key**

| | |
|---|---|
| **F1:** | General Help list |
| **F2:** | Add/ Remove a favorite item |
| **F3:** | Enter Favorites menu |
| **F4:** | Enter CPU Specifications menu |
| **F5:** | Enter Memory-Z menu |
| **F6:** | Load optimized defaults |
| **F7:** | Switch between Advanced mode and EZ mode |
| **F8:** | Load Overclocking Profile |
| **F9:** | Save Overclocking Profile |
| **F10:** | Save Change and Reset* |
| **F12:** | Take a screenshot and save it to USB flash drive (FAT/ FAT32 format only). |
| **Ctrl+F:** | Enter Search page |

* When you press F10, a confirmation window appears and it provides the modification information. Select between Yes or No to confirm your choice.

## BIOS User Guide

If you' d like to know more instructions on setting up the BIOS, please refer to http://download.msi.com/manual/mb/AMDX570BIOS.pdf or scan the QR code to access.

***Important***

*The appearance of the BIOS user guide may differ based on your motherboard model. Please consult your motherboard' s BIOS for specific settings and options.*

# Resetting BIOS

You might need to restore the default BIOS setting to solve certain problems. You can use the following methods to reset the BIOS settings.

- Go to BIOS and press **F6** to load optimized defaults.
- Short the **Clear CMOS** jumper on the motherboard.
- Press the **Clear CMOS** button on the rear I/O panel. If your motherboard doesn' t have this button, skip this step.

***Important***

*Be sure the computer is off before clearing CMOS data. Please refer to the **Clear CMOS** jumper/ button section for resetting BIOS.*

# Updating BIOS

## Updating BIOS with M-FLASH

Before starting the M-Flash process, make sure you have:

- A USB flash drive with a capacity of 32GB or less that is formatted to FAT32.

***Important***

*M-Flash only supports FAT32 format, and the USB flash drive should not exceed 32GB.*

- A computer with internet access.

Please follow the steps below to update BIOS:

1. Download the latest BIOS file from the MSI website that matches your motherboard model, and save it to the USB flash drive.
2. If your motherboard has a Multi-BIOS switch, switch to the target BIOS ROM.
3. Insert the USB flash drive into your motherboard' s USB port.
4. Enter flash mode by either:
   - Rebooting and pressing **Ctrl + F5** during POST, then clicking **Yes** to reboot the system.
   - Rebooting and pressing **Del** during POST to enter BIOS, then clicking the M-FLASH button and clicking **Yes** to reboot.
5. Select a BIOS file from the **M-FLASH File** menu and press **Enter**.
6. When prompted by a File Check message, click **Yes** to start the BIOS update.

Once the update reaches 100%, the system will reboot automatically.

## Updating BIOS with MSI Center

Before updating:

- Ensure the LAN driver is installed, and the internet connection is working properly.
- Close all other applications before updating the BIOS.

To update BIOS:

1. Install and launch MSI Center, then go to **Support** page.
2. Select **Live Update** and click on **Advance** button.
3. Select the BIOS file and click on **Install** button.
4. The installation reminder will appear, then click the **Install** button.

The system will automatically restart to update the BIOS. Once the flashing process is complete, the system will restart.

# Regulatory Notices

## FCC-B Radio Frequency Interference Statement

This equipment has been tested and found to comply with the limits for a Class B digital device, pursuant to part 15 of the FCC rules. These limits are designed to provide reasonable protection against harmful interference in a residential installation. This equipment generates, uses and radiates radio frequency energy, and, if not installed and used in accordance with the instructions, may cause harmful interference to radio communications. However, there is no guarantee that interference will not occur in a particular installation. If this equipment does cause harmful interference to radio or television reception, which can be determined by turning the equipment off and on, the user is encouraged to try to correct the interference by one or more of the following measures:

- Reorient or relocate the receiving antenna.
- Increase the separation between the equipment and receiver.
- Connect the equipment into an outlet on a circuit different from that to which the receiver is connected.

**NOTE**

- The changes or modifications not expressly approved by the party responsible for compliance could void the user' s authority to operate the equipment.
- Shield interface cables and AC power cord, if any, must be used in order to comply with the emission limits.

## FCC Conditions

This device complies with part 15 of the FCC Rules. Operation is subject to the following two conditions:

- This device may not cause harmful interference.
- This device must accept any interference received, including interference that may cause undesired operation.

**MSI Computer Corp.**

901 Canada Court, City of Industry, CA 91748, USA

(626)913-0828

www.msi.com

## CE Conformity

Products bearing the CE marking comply with one or more of the following EU Directives as may be applicable:

- RED 2014/53/EU
- Low Voltage Directive 2014/35/EU
- EMC Directive 2014/30/EU
- RoHS Directive 2011/65/EU
- Implementing measure Directive 2009/125/EC of ESPR Regulation (EU) 2024/1781

Compliance with these directives is assessed using applicable European Harmonized Standards.
For any support regarding the EU General Product Safety Regulation (GPSR), please contact MSI Computer Europe B.V. via https://msi.gm/gpsr Churchilllaan 202, 5705 BK Helmond, the Netherlands.

## Products with Radio Functionality (EMF)

This product incorporates a radio transmitting and receiving device. For computers in normal use, a separation distance of 20 cm ensures that radio frequency exposure levels comply with EU requirements. Products designed to be operated at closer proximities, such as tablet computers, comply with applicable EU requirements in typical operating positions. Products can be operated without maintaining a separation distance unless otherwise indicated in instructions specific to the product.

## Restrictions for Products with Radio Functionality

**WLAN 5150-5350 MHz:**

The WiFi operating in the band 5150-5350 MHz shall be restricted to indoor use in the European Union.

**WLAN 6E:**

a. Low Power Indoor (LPI) Wi-Fi 5.945-6.425 GHz devices:

   The device is restricted to indoor use only when operating in the 5945 to 6425 MHz frequency range in the European Union.

b. Very Low Power (VLP) Wi-Fi 5.945-6.425 GHz devices (portable devices):

   The device is not permitted to be used on Unmanned Aircraft Systems (UAS) when operating in the 5945 to 6425 MHz frequency range in the European Union.

## Wireless Radio Use

This device is restricted to indoor use when operating in the 2.4GHz, 5GHz, 6GHz frequency band.

Cet appareil doit être utilisé à l' intérieur.

당해 무선설비는 운용중 전파혼신 가능성이 있음.

この製品は、周波数帯域 2.4GHz, 5GHz, 6GHz で動作しているときは、屋内においてのみ使用可能です。

**NCC無線設備警告聲明**

工作頻率2.4GHz, 5GHz, 6GHz該頻段限於室內使用。

經型式認證合格之低功率射頻電機，非經許可，公司、商號或使用者均不得擅自變更頻率、加大功率或變更原設計之特性及功能。

低功率射頻電機之使用不得影響飛航安全及干擾合法通信；經發現有干擾現象時，應立即停用，並改善至無干擾時方得繼續使用。前項合法通信，指依電信法規定作業之無線電通信。低功率射頻電機須忍受合法通信或工業、科學及醫療用電波輻射性電機設備之干擾。

## Compliance Statement of Innovation, Science and Economic Development Canada (ISED)

This device complies with with Innovation, Science and Economic Development Canada' s licence-exempt RSS(s). Operation is subject to the following two conditions:

(1) this device may not cause interference, and (2) this device must accept any interference, including interference that may cause undesired operation of the device.

Operation in the band 5150-5250 MHz is only for indoor use to reduce the potential for harmful interference to co-channel mobile satellite systems.

CAN ICES-003(B)/NMB-003(B)

## Australia and New Zealand notice

This equipment incorporates a radio transmitting and receiving device. In normal use, a separation distance of 20 cm ensures that radio frequency exposure levels comply with the Australian and New Zealand Standards.

## クラスB情報技術装置

この装置は、クラスB情報技術装置です。この装置は、家庭環境で使用することを目的としていますが、この装置がラジオやテレビジョン受信機に近接して使用されると、受信障害を引き起こすことがあります。取扱説明書に従って正しい取り扱いをして下さい。

VCCI-B

## KC인증서

R-R-MSI-40-7C95

상호: (주)엠에스아이코리아
제품명: 메인보드
모델명: 40-7C95
제조년월: 2026년
제조자 및 제조국가: MSI/중국

## Declaración de Cumplimiento para Chile (SUBTEL)

Para acceder a la Declaración de Conformidad y a la información de cumplimiento de Wi-Fi/Bluetooth según las regulaciones de SUBTEL, escanee el código QR o visite el siguiente enlace:
https://msi.gm/S11CB66B

# Battery Information

**European Union:**

Batteries, battery packs, and accumulators should not be disposed of as unsorted household waste. Please use the public collection system to return, recycle, or treat them in compliance with the local regulations.

**BSMI:**

廢電池請回收

For better environmental protection, waste batteries should be collected separately for recycling or special disposal.

**California, USA:**

The button cell battery may contain perchlorate material and requires special handling when recycled or disposed of in California.
For further information please visit:
https://dtsc.ca.gov/perchlorate/

## ⚠WARNING

- **INGESTION HAZARD**: This product contains a button cell or coin battery.
- **DEATH** or serious injury can occur if ingested.
- A swallowed button cell or coin battery can cause **Internal Chemical Burns** in as little as **2 hours**.
- **KEEP** new and used batteries **OUT OF REACH OF CHILDREN**
- **Seek immediate medical attention** if a battery is suspected to be swallowed or inserted inside any part of the body.

- Remove and immediately recycle or dispose of used batteries according to local regulations and keep away from children. Do NOT dispose of batteries in household trash or incinerate.
- Even used batteries may cause severe injury or death. Call a local poison control center for treatment information.
- Battery type: CR2032
- Battery voltage: 3V
- Non-rechargeable batteries are not to be recharged.
- Do not force discharge, recharge, disassemble, heat above (manufacturer' s specified temperature rating) or incinerate. Doing so may result in injury due to venting, leakage or explosion resulting in chemical burns.
- This product contains an irreplaceable battery.
- This icon indicates that a swallowed button battery can cause serious injury or death. Please keep batteries out of sight or reach of children.

## ⚠ AVERTISSEMENT

- **RISQUE D' INGESTION**: ce produit contient une pile bouton.
- Si elle est ingérée, elle peut entraîner la **MORT** ou provoquer de graves blessures.
- Une pile bouton ingérée peut provoquer des **brûlures chimiques internes** en seulement **2 heures**.
- **GARDER** les piles neuves et usagées **HORS DE PORTÉE des ENFANTS**.
- **Demander une aide médicale immédiate** en cas de suspicion d' ingestion ou d' insertion d' une pile dans une partie quelconque du corps.

- Retirer les piles usagées et procéder immédiatement au recyclage ou à la mise au rebut conformément aux réglementations locales, et les tenir hors de portée des enfants. Ne PAS jeter les piles aux ordures ménagères ni les incinérer.
- Les piles même usagées peuvent provoquer des blessures graves, voire mortelles. Appeler un centre antipoison local pour obtenir des informations sur le traitement.
- Type de pile: CR2032
- Tension nominale de la batterie: 3V
- Les piles non rechargeables ne doivent pas être rechargées.
- Ne pas forcer la décharge, recharger, démonter, chauffer au-delà de (la température spécifiée par le fabricant) ou incinérer. Le non-respect de cette instruction pourrait entraîner des blessures dues à une fuite d' air ou de liquide ou à une explosion occasionnant des brûlures chimiques.
- Ce produit contient une batterie non remplaçable.
- Cet icône indique qu' une pile bouton avalée peut causer des blessures graves, voire mortelles. Veuillez conserver les piles hors de vue et de portée des enfants.

## Chemical Substances Information

In compliance with chemical substances regulations, such as the EU REACH Regulation (Regulation EC No. 1907/2006 of the European Parliament and the Council), MSI provides the information of chemical substances in products at:

https://csr.msi.com/global/index

## Environmental Policy

- The product has been designed to enable proper reuse of parts and recycling and should not be thrown away at its end of life.
- Users should contact the local authorized point of collection for recycling and disposing of their end-of-life products.
- Visit the MSI website <https://csr.msi.com/global/pevn_ewaste> and locate a nearby distributor for further recycling information.
- Please visit <https://us.msi.com/page/recycling> for information regarding the recycling of your product in the US.

## WEEE (Waste Electrical and Electronic Equipment) Statement

**European Union**: This symbol on the product indicates that this product cannot be discarded as municipal waste. Instead, it is your responsibility to dispose of your waste electrical and electronic equipment by handing it over to a designated collection point for recycling. For more information about where you can drop off your waste equipment for recycling, please contact your local city office, your household waste disposal service or the shop where you purchased the product.

## 日本JIS C 0950材質宣言

日本工業規格JIS C 0950により、2006年7月1日以降に販売される特定分野の電気および電子機器について、製造者による含有物質の表示が義務付けられます。

https://csr.msi.com/tw/Japan-JIS-C-0950-Material-Declarations

## India RoHS

This product complies with the “India E-waste (Management and Handling) Rule 2011” and prohibits use of lead, mercury, hexavalent chromium, polybrominated biphenyls or polybrominated diphenyl ethers in concentrations exceeding 0.1 weight % and 0.01 weight % for cadmium, except for the exemptions set in Schedule 2 of the Rule.

## Türkiye EEE yönetmeliği

Türkiye Cumhuriyeti: EEE Yönetmeliğine Uygundur

## Україна обмеження на наявність небезпечних речовин

Обладнання відповідає вимогам Технічного регламенту щодо обмеження використання деяких небезпечних речовин в електричному та електронному обладнані, затвердженого постановою Кабінету Міністрів України від 10 березня 2017 р. № 139

## Việt Nam RoHS

Kể từ ngày 01/12/2012, tất cả các sản phẩm do công ty MSI sản xuất tuân thủ Thông tư số 30/2011/TT-BCT quy định tạm thời về giới hạn hàm lượng cho phép của một số hóa chất độc hại có trong các sản phẩm điện, điện tử"

## Bangladesh RoHS Statement

This product shipping to Bangladesh comply with RoHS requirements as prescribed in the Hazardous Waste (E-waste) Management Rules, 2021 by Government of Bangladesh.

For more information, please refer:
https://csr.msi.com/global/bangladesh-rohs-statement

## Bangladesh E-waste Management Reminder

Please manage, dismantle, dispose of, or recycle e-waste properly as per the Environmental Protection Rules, 1997 to avoid the harm that may be caused to the environment and ecosystem, public interest and public health.

## Material Declaration under India' s Plastic Waste Management Rules:

INDOMSI COMPUTERS PRIVATE LIMITED

Regn. No.: IM-06-000-06-AAHCI0478A-25

Thickness ≥ 50 microns

## MS-7C95主板产品中有害物质的名称及含有信息表

| 部件名称 | 有害物质 | | | | | | | | | |
|---|---|---|---|---|---|---|---|---|---|---|
| | Pb | Hg | Cd | Cr(VI) | PBBs | PBDEs | DBP | DIBP | BBP | DEHP |
| 电路板组件* | ╳ | ○ | ○ | ○ | ○ | ○ | ○ | ○ | ○ | ○ |
| 外部信号连接头 | ╳ | ○ | ○ | ○ | ○ | ○ | ○ | ○ | ○ | ○ |
| 线材 | ╳ | ○ | ○ | ○ | ○ | ○ | ○ | ○ | ○ | ○ |

注1：○：表示该有害物质在该部件所有均质材料中的含量均不超出电器电子产品有害物质限制使用国家标准要求。

╳：表示该有害物质至少在该部件的某一均质材料中的含量超出电器电子产品有害物质限制使用国家标准要求。

注2：以上未列出的部件，表明其有害物質含量均不超出电器电子产品有害物质限制使用国家标准要求。

注3：上述表格标注“╳”之部件，皆符合达标管理目录限用物质应用例外清单之限值要求。

* 电路板组件：包括印刷电路板及其构成的零部件。

## 限用物質含有情況標示聲明書

設備名稱：電腦主機板　　型號(型式)：MS-7C95

| 單元 | 限用物質及其化學符號 | | | | | |
|---|---|---|---|---|---|---|
| | 鉛 (Pb) | 汞 (Hg) | 鎘 (Cd) | 六價鉻 ($Cr^{+6}$) | 多溴聯苯 (PBB) | 多溴二苯醚 (PBDE) |
| 電路板 | ○ | ○ | ○ | ○ | ○ | ○ |
| 電子元件 | — | ○ | ○ | ○ | ○ | ○ |
| 金屬機構件 | — | ○ | ○ | ○ | ○ | ○ |
| 塑膠機構件 | ○ | ○ | ○ | ○ | ○ | ○ |

備考1. “超出0.1 wt %” 及 “超出0.01 wt %” 係指限用物質之百分比含量超出百分比含量基準值。

備考2. “○” 係指該項限用物質之百分比含量未超出百分比含量基準值。

備考3. “—” 係指該項限用物質為排除項目。

## Copyright and Trademarks Notice

Copyright © Micro-Star Int' l Co., Ltd. All rights reserved. The MSI logo used is a registered trademark of Micro-Star Int' l Co., Ltd. All other marks and names mentioned may be trademarks of their respective owners. No warranty as to accuracy or completeness is expressed or implied. MSI reserves the right to make changes to this document without prior notice.

The terms HDMI™, HDMI™ High-Definition Multimedia Interface, HDMI™ Trade dress and the HDMI™ Logos are trademarks or registered trademarks of HDMI™ Licensing Administrator, Inc.

## Technical Support

If a problem arises with your system and no solution can be obtained from the user guide, please contact your place of purchase or local distributor. Alternatively, please try the following help resources for further guidance.

- Visit the MSI website for technical guide, BIOS updates, driver updates, and other information: https://www.msi.com/support/
- Register your product at: http://register.msi.com

## Revision History

- Version 4.0, 2026/05, First release for PRO B550M-P WIFI6E & PRO B550M-P.