MAG Series

Motherboard

MAG X870E GAMING PLUS MAX WIFI

User Guide

Contents

Quick Start 4

Specifications 17

Special Features 21

Package Contents 22

Back Panel Connectors 23

- LAN Port LED Status Table 24
- Audio Jacks Connection 24
- Installing Antenna 26

Overview of Components 27

- CPU Socket 28
- DDR5 DIMM Slots 30
- PCI_E1~4: PCIe Expansion Slots 32
- M2_1~3: M.2 Slots (Key M) 35
- SATA_P1~P4: SATA 6Gb/s Connectors 42
- JAUD1: Front Audio Connector 42
- JFP1, JFP2: Front Panel Connectors 43
- CPU_PWR1~2, ATX_PWR1, PCIE_PWR1: Power Connectors 44
- JCI1: Chassis Intrusion Connector 45
- JOC_FS1: Safe Boot Jumper 45
- JUSBC1: USB 10Gbps Type-C® Front Panel Connector 46
- JUSB3~4: USB 5Gbps Connectors 46
- JUSB1~2, 5: USB 2.0 Connectors 47
- JTPM1: TPM Module Connector 47
- CPU_FAN1, PUMP_SYS1, SYS_FAN1~6: Fan Connectors 48
- JBAT1: Clear CMOS (Reset BIOS) Jumper 49
- JDASH1 : Tuning Controller connector 49
- JBCLK1~2: BCLK Frequency Jumpers 50
- JRGB1: RGB LED connector 51
- JARGB_V2_1~3: A-RAINBOW V2 (ARGB Gen2) LED connectors 52
- JAF_1: EZ Conn-Header V1 54

Onboard LEDs 56

- EZ Debug LED 56
- EZ Memory Detection LED 56

Installing OS, Drivers & MSI Center.....57
Installing Drivers with MSI Driver Utility Installer..... 58
UEFI BIOS.....61
BIOS Setup..... 62
Entering BIOS Setup..... 63
Resetting BIOS..... 64
Updating BIOS..... 64
Block Diagram.....66
Regulatory Notices.....i

Quick Start

This Quick Start provides clear diagrams to help you install the motherboard. Video demonstrations are also available for some installations. Visit these videos by clicking the provided URL on your phone or tablet' s web browser. Alternatively, you can scan the QR code to access the video directly.

Preparing Tools and Components

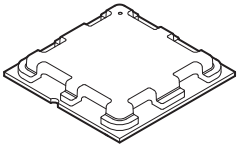

AMD® AM5 CPU

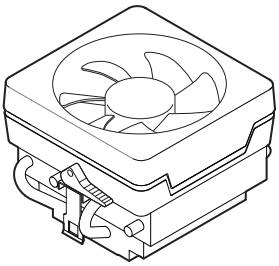

AM5 CPU Fan

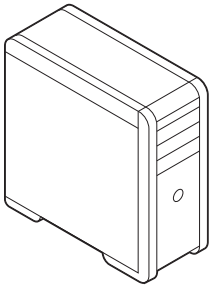

Chassis

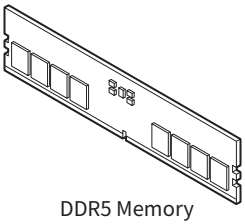

DDR5 Memory

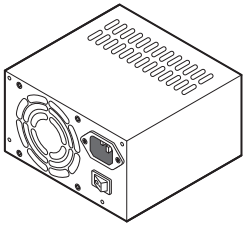

Power Supply Unit

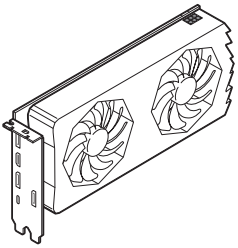

Graphics Card

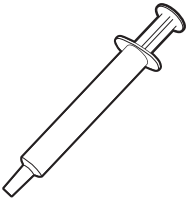

Thermal Paste

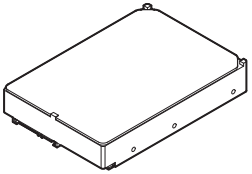

SATA Hard Disk Drive

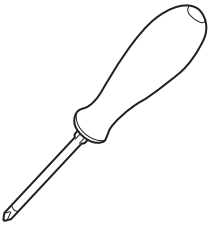

Phillips Screwdriver



A Package of Screws

Safety Information

- The components included in this package are prone to damage from electrostatic discharge (ESD). Please adhere to the following instructions to ensure successful computer assembly.
- Ensure that all components are securely connected. Loose connections may cause the computer to not recognize a component or fail to start.
- Hold the motherboard by the edges to avoid touching sensitive components.
- It is recommended to wear an electrostatic discharge (ESD) wrist strap when handling the motherboard to prevent electrostatic damage. If an ESD wrist strap is not available, discharge yourself of static electricity by touching another metal object before handling the motherboard.
- Store the motherboard in an electrostatic shielding container or on an anti-static pad whenever the motherboard is not installed.
- Before turning on the computer, ensure that there are no loose screws or metal components on the motherboard or anywhere within the computer case.
- Do not boot the computer before installation is completed. This could cause permanent damage to the components as well as injury to the user.
- If you need help during any installation step, please consult a certified computer technician.
- Always turn off the power supply and unplug the power cord from the power outlet before installing or removing any computer component.
- Keep this user guide for future reference.
- Keep this motherboard away from humidity.
- Make sure that your electrical outlet provides the same voltage as is indicated on the PSU, before connecting the PSU to the electrical outlet.
- Place the power cord such a way that people can not step on it. Do not place anything over the power cord.
- All cautions and warnings on the motherboard should be noted.
- If any of the following situations arises, get the motherboard checked by service personnel:
  - Liquid has penetrated into the computer.
  - The motherboard has been exposed to moisture.
  - The motherboard does not work well or you can not get it work according to user guide.
  - The motherboard has been dropped and damaged.
  - The motherboard has obvious sign of breakage.
- Do not leave this motherboard in an environment above 60°C (140°F), it may damage the motherboard.

Case stand-off notification

To prevent damage to the motherboard, any unnecessary mounting stand-off between the motherboard circuits and the computer case is prohibited. The Case standoff keep out zone signs will be marked on the backside of motherboard (as shown below) to serve as a warning to user.

Avoid collision notification

Protective paint is printed around each screw hole to prevent parts from being scratched.

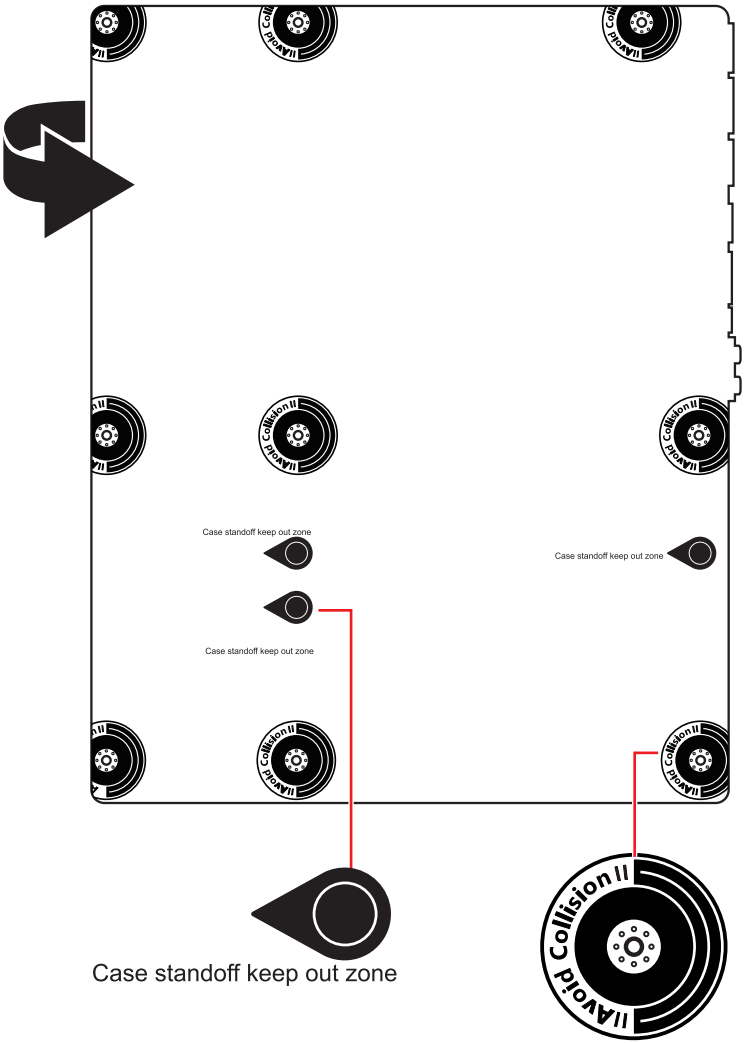

* The illustration above is for reference only and may vary from the motherboard you purchased.

Installing a Processor

- https://msi.gm/SDBE5855

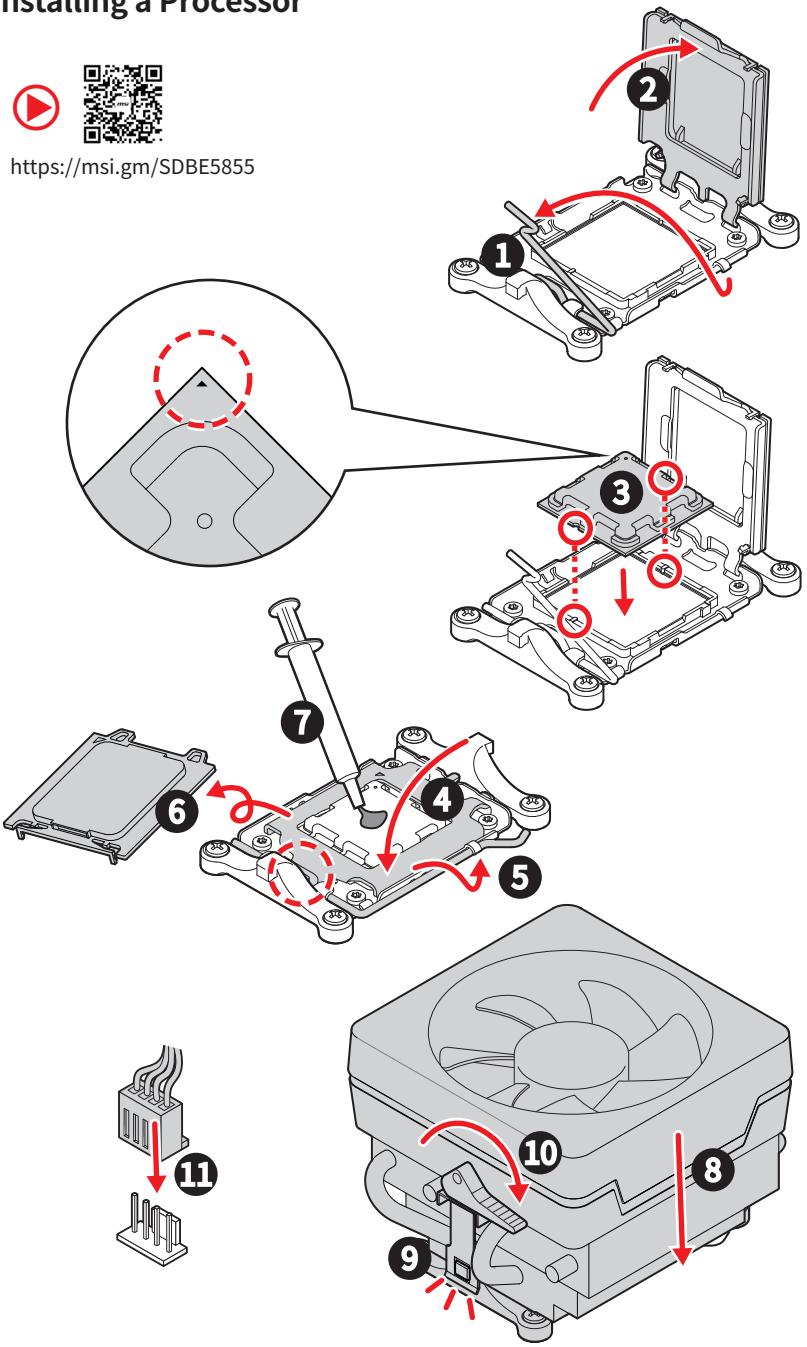

Important

If you are installing the screw-type CPU heatsink, please follow the figure below to remove the retention module first and then install the heatsink.

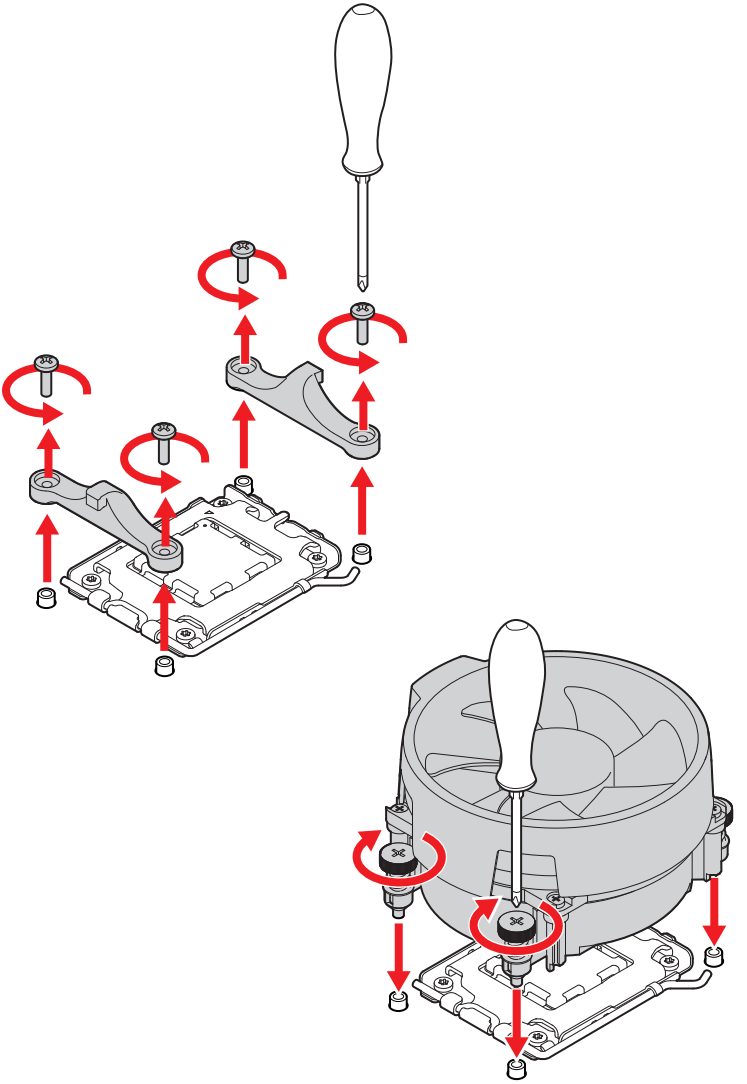

Installing DDR5 memory

- https://msi.gm/S647FF99

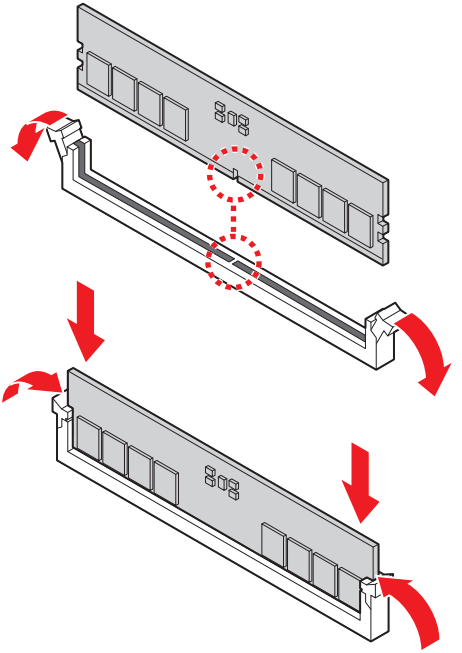

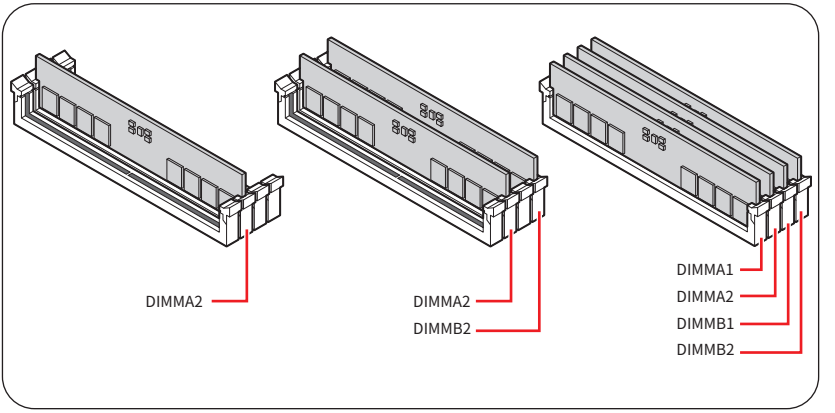

Connecting the Front Panel Header

- https://msi.gm/S8EF7577

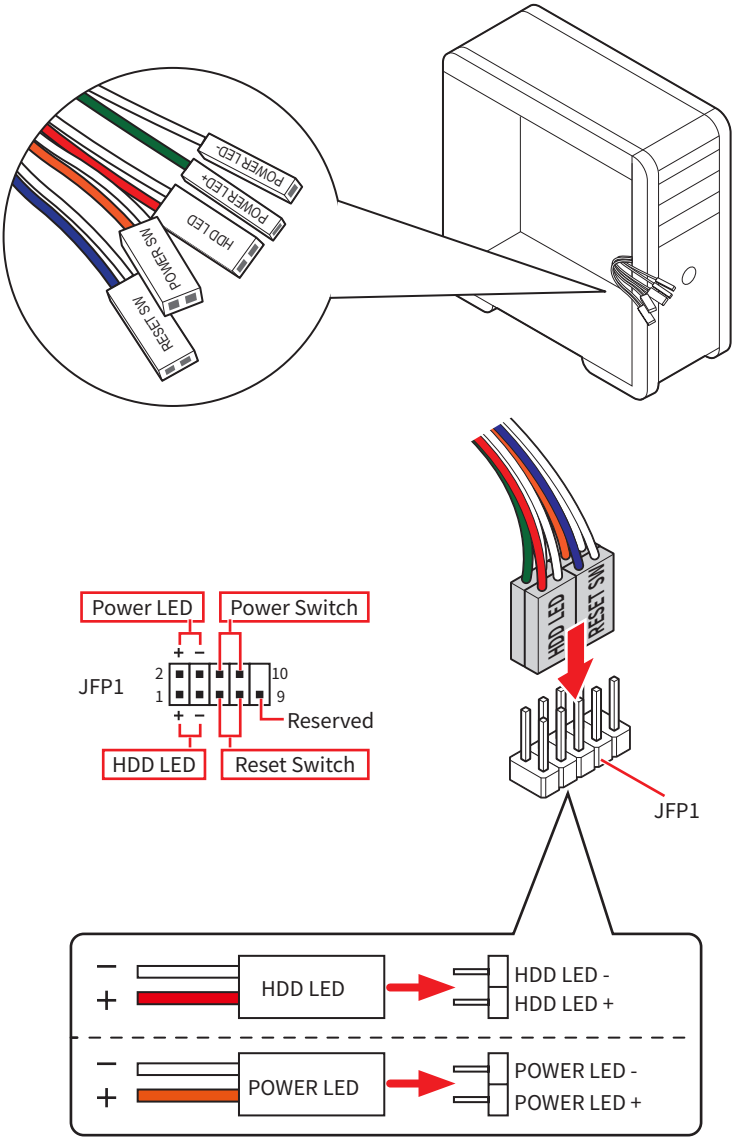

Installing the Motherboard

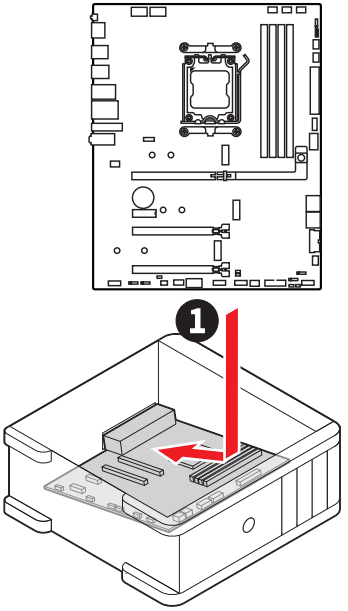

- https://msi.gm/S4BA9046

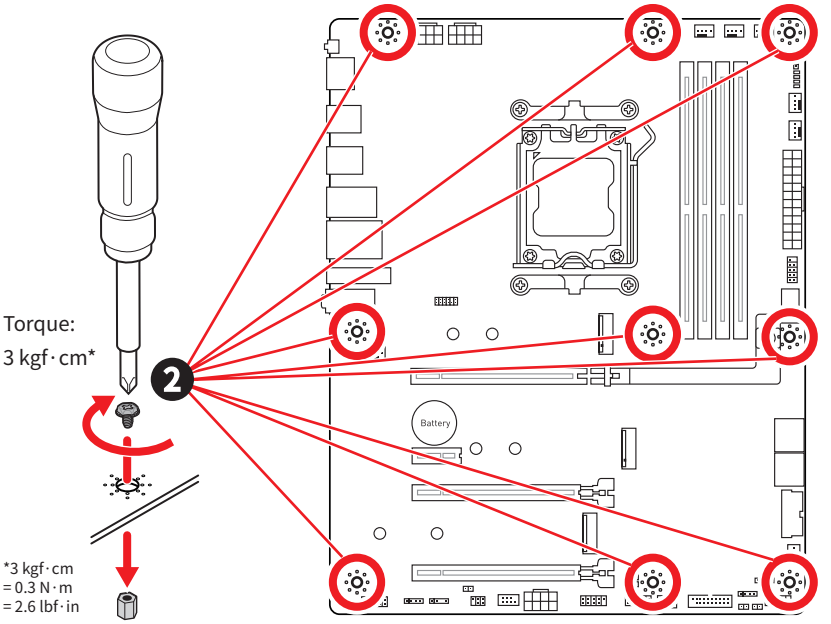

Connecting the Power Connectors

- https://msi.gm/SD937E2C

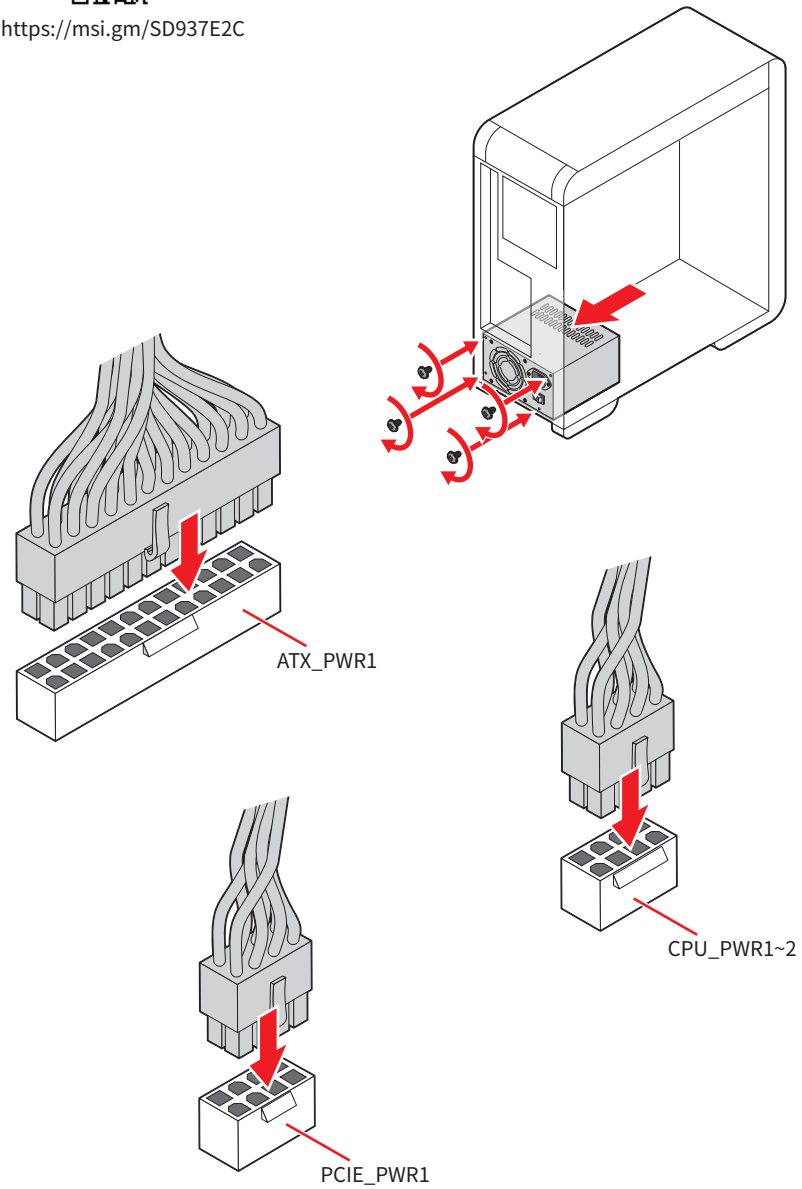

Installing SATA Drives

- https://msi.gm/S9369131

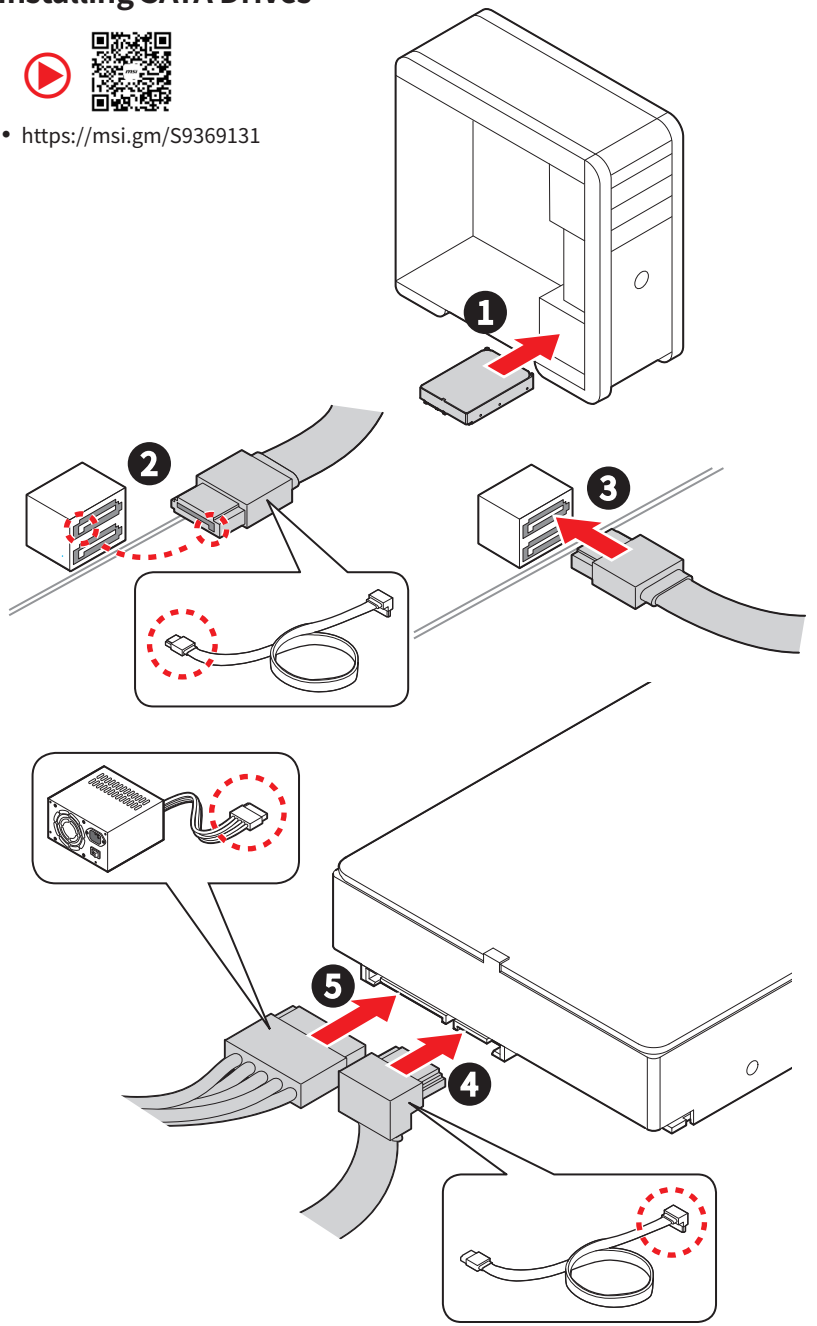

Installing a Graphics Card

- https://msi.gm/S6B36811

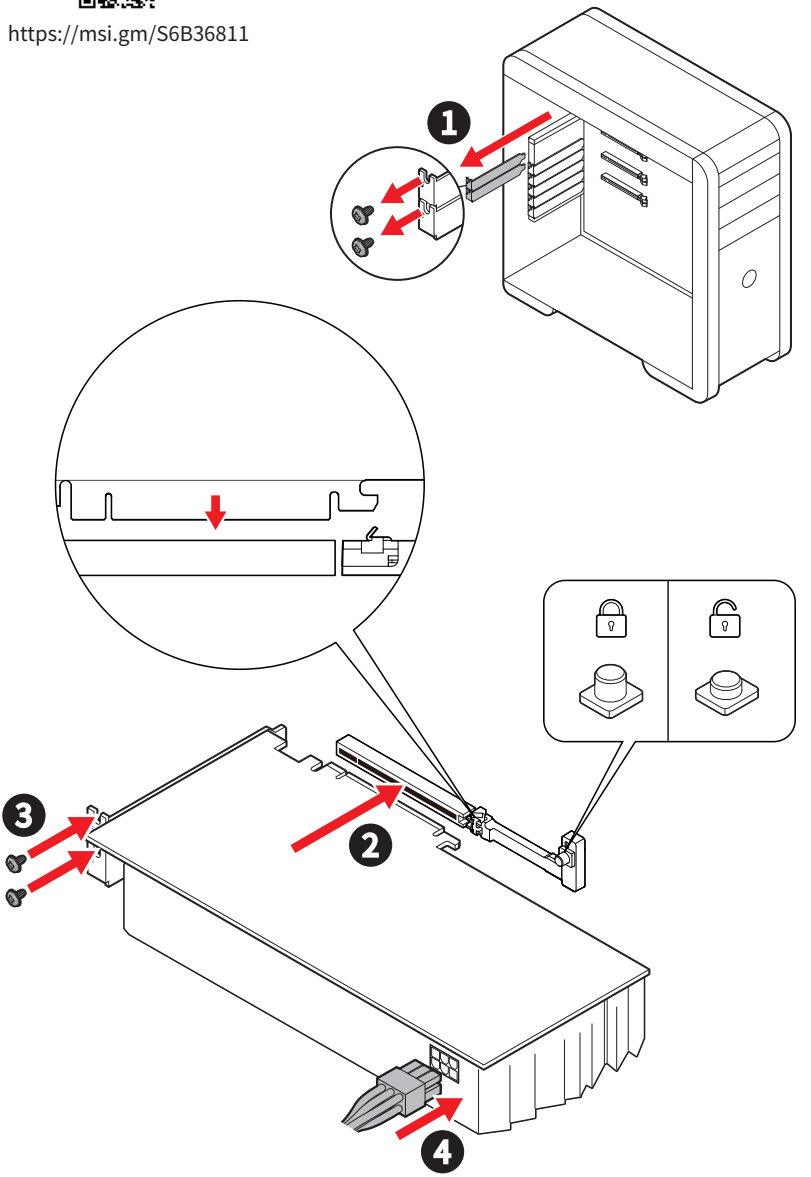

Connecting Peripheral Devices

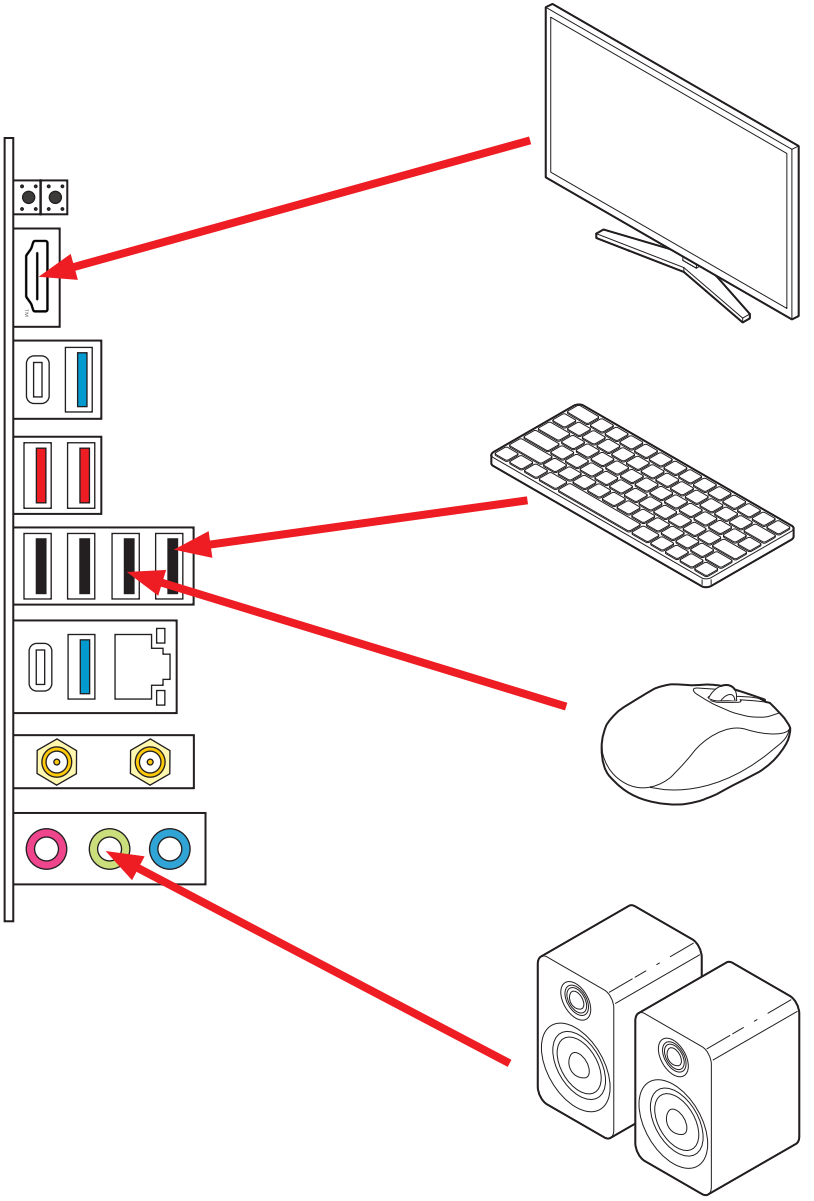

Power On

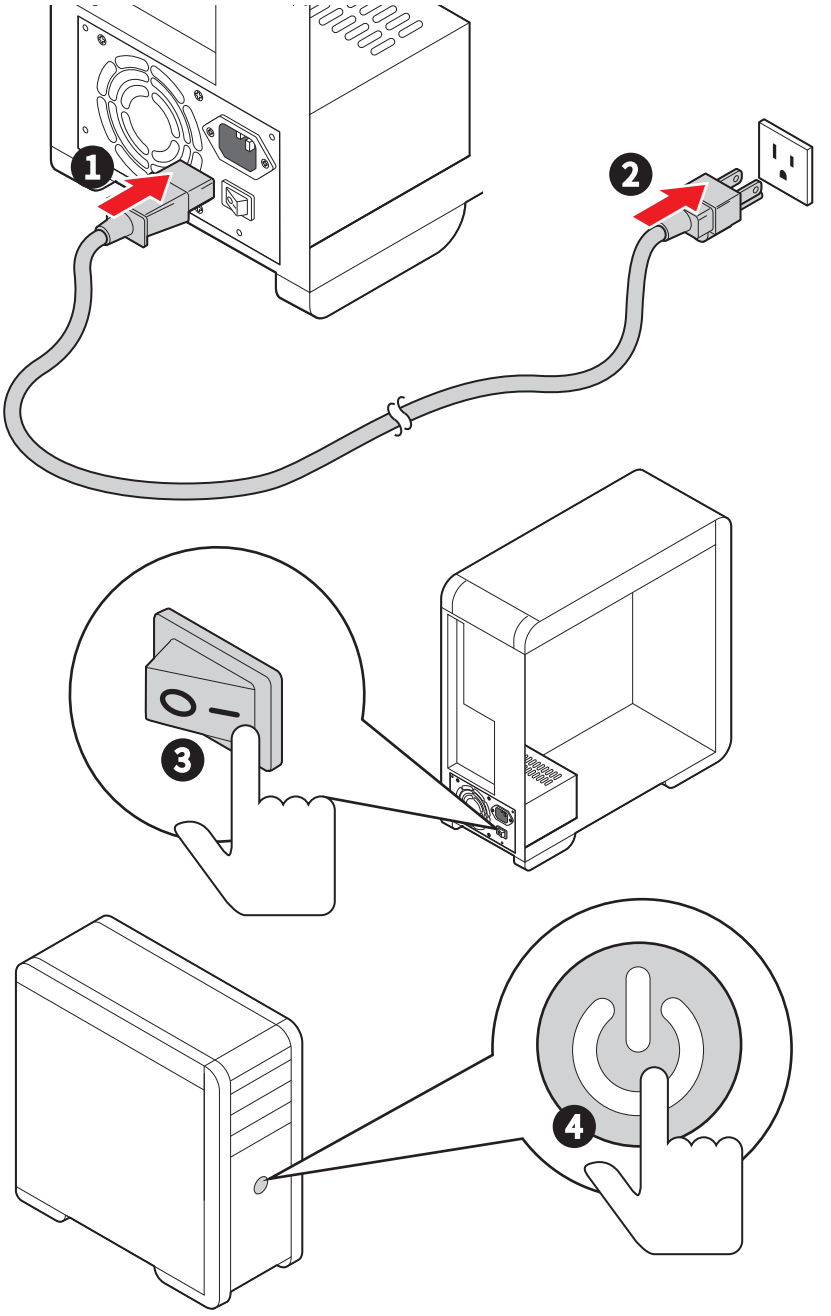

Specifications

CPU	• Supports AMD Ryzen™ 9000/ 8000/ 7000 Series Desktop Processors* • Processor socket AM5 * Please go to www.msi.com to get the newest support status as new processors are released.
Chipset	AMD X870E Chipset
Memory	• 4x DDR5 memory slots*, supporting up to 256GB** • Supports AMD POR Speed and JEDEC Speed • Supports Memory Overclocking and AMD EXPO™ • Supports Dual-Channel mode • Supports Non-ECC, Un-buffered memory • Supports CUDIMM, Clock Driver bypass mode only*** * The DIMM slots on this motherboard have double-sided latches. ** Memory compatibility and supported speeds can vary depending on the CPU and memory configuration. For detailed information, please refer to the Memory Compatibility List available on the product' s Support page or visit https://www.msi.com/support/. *** CUDIMM support and POR boot frequency may vary by CPU series, with manual overclocking available after boot. Certain CPUs may fail to boot, but future BIOS updates will improve compatibility.

Expansion Slots	• 3x PCIe x16 slots
	  • PCI_E1 slot (From CPU)
	  • Supports up to PCIe 5.0 x16 (For Ryzen™ 9000/ 7000 Series processors)
	  • Supports up to PCIe 4.0 x8 (For Ryzen™ 8700/ 8600/ 8400 Series processors)
	  • Supports up to PCIe 4.0 x4 (For Ryzen™ 8500/ 8300 Series processors)
	  • PCI_E3 supports up to PCIe 4.0 x4 (From X870E chipset)
	  • PCI_E4 supports up to PCIe 3.0 x1 (From X870E chipset)
	• 1x PCIe x1 slot
	  • PCI_E2 supports up to PCIe 3.0 x1 (From X870E chipset)

Onboard Graphics	• 1x HDMI™ 2.1 port, supporting a maximum resolution of 4K 60Hz*/ ** • 1x USB4 port, supporting DisplayPort 1.4 with HBR3 over USB Type-C® with a maximum resolution of 4K 120 Hz*/** * Available only on processors featuring integrated graphics. ** Graphics specifications may vary depending on the CPU installed.
SATA Ports	• 4x SATA 6Gb/s ports (From X870E chipset)

Continued on next column

Continued from previous column

M.2 SSD Slots	• 3x M.2 slots (Key M)
	  • M2_1 slot (From CPU)
	  • Supports up to PCIe 5.0 x4 (For Ryzen™ 9000/ 7000 Series processors)
	  • Supports up to PCIe 4.0 x4 (For Ryzen™ 8000 Series processors)
	  • Supports 2260/ 2280 storage devices
	  • M2_2 slot (From X870E chipset)
	  • Supports up to PCIe 4.0 x4
	  • Supports 2260/ 2280 storage devices
	  • M2_3 slot (From X870E chipset)
	  • Supports up to PCIe 4.0 x4
	  • Supports 2280/ 22110 storage devices

RAID	• Supports RAID 0 , RAID 1 and RAID 10 for SATA storage devices • Supports RAID 0, RAID 1 and RAID 5 for M.2 NVMe storage devices • RAID 5 configuration is only supported by Ryzen™ 9000 series processors.
Audio	Realtek® ALC897 • 7.1-Channel High Definition Audio
LAN	• 1x Realtek® 8126VB 5Gbps LAN controller
Wi-Fi & Bluetooth®	Wi-Fi 7 • The Wireless module is pre-installed in the M.2 (Key-E)slot • Supports MU-MIMO TX/RX, 2.4GHz/ 5GHz/ 6GHz* (320MHz) up to 5.8Gbps • Supports 802.11 a/ b/ g/ n/ ac/ ax/ be • Supports Bluetooth® 5.4**, MLO, 4KQAM * 6GHz band support may depend on every country' s regulations and Wi-Fi 7 will be ready in Windows 11 version 24H2. ** The Bluetooth version may be updated, please refer to the Wi-Fi chipset vendor' s website for details. Bluetooth 5.4 will be ready in Windows 11 version 24H2.
Power Connectors	• 1x 24-pin ATX main power connector • 2x 8-pin +12V power connectors • 1x 8-pin PCIe power connector

Continued on next column

Continued from previous column

Internal USB Connectors	• 1x USB 10Gbps Type-C® front panel port (From X870E chipset)
	• 2x USB 5Gbps connectors (From X870E chipset)
	  • Supports additional 4 USB 5Gbps ports
	• 3x USB 2.0 connectors (From X870E chipset)
	  • Supports additional 6 USB 2.0 ports

Fan Connectors	• 1x 4-pin CPU fan connector • 1x 4-pin water-pump/ system fan connector • 6x 4-pin system fan connectors
System Connectors	• 1x Front panel audio connector • 2x System panel connectors • 1x Chassis Intrusion connector • 1x TPM module connector • 1x Tuning Controller connector • 1x EZ Conn-Header V1 (JAF_1)
Jumpers	• 1x Clear CMOS jumper • 1x OC safe boot jumper • 2x BCLK frequency jumpers
LED Features	• 1x 4-pin RGB LED connector • 3x 3-pin A-RAINBOW V2 (ARGB Gen2) LED connectors • 4x EZ Debug LED • 1x EZ Memory Detection LED
Back Panel Connectors & Others	• 1x Clear CMOS button • 1x Flash BIOS button • 1x HDMI™ port • 1x USB 5Gbps Type-A port (From CPU) • 1x USB 40Gbps Type-C port (From ASM4242) • 2x USB 10Gbps Type-A ports (From CPU) • 4x USB 2.0 ports (From X870E chipset) • 1x 5G LAN (RJ45) jack • 1x USB 5Gbps Type-A port (From X870E chipset) • 1x USB 20Gbps Type-C port (From X870E chipset) • 2x Wi-Fi Antenna connectors • 3x audio jacks

Continued on next column

Continued from previous column

I/O Controller	NUVOTON NCT6687-R Controller Chip
Hardware Monitor	• CPU/ System/ Chipset temperature detection • CPU/ System/ Pump fan speed detection • CPU/ System/ Pump fan speed control
Form Factor	• ATX Form Factor • 9.6 in. x 12 in. (244 mm x 305 mm)
BIOS Features	• 1x 512 Mb flash • UEFI AMI BIOS • ACPI 6.5, SMBIOS 3.7 • Multi-language
Software	• Drivers • MSI Center • Acrobat • Adobe Creative Cloud • AIDA64 Extreme - MSI Edition • Dropbox • CPU-Z MSI GAMING • Norton 360 • Voicemod • MSI DigiME • Google Play Games on PC

Special Features

MSI Center

- MSI AI Engine
- Mystic Light
- Frozr AI Cooling
- User Scenario
- True Color
- Live Update
- Hardware Monitoring
- MSI Companion
- System Diagnosis
- LAN Manager

Performance

- Core Boost
- Dual CPU Power
- Memory Boost
- Lightning Gen 5 PCI-E
- Lightning Gen 5 M.2 Slot
- 2oz Copper thickened PCB

DIY Friendly

- PCI-E Steel Armor
- EZ DEBUG LED
- EZ LED Control
- EZ PCIe Release

Audio

- Audio Boost

RGB Support

- Mystic Light Extension (RGB + A-RAINBOW V2)
- Ambient Devices Support

BIOS

- Click BIOS X

Package Contents

Please check the contents of your motherboard package. It should contain:

Board

- 1x Motherboard

Documentation

- 1x Quick installation guide
- 1x European Union Regulatory Notices

Cables

- 2x SATA 6Gb/s cables
- 1x EZ Front Panel Cable
- 1x 1 to 2 EZ Conn-Cable (V1)

Accessories

- 1x EZ Wi-Fi antenna
- 2x EZ M.2 Clip II
- 1x EZ M.2 Clip II Remover

Important

If any of the above items are damaged or missing, please contact your retailer.

Back Panel Connectors

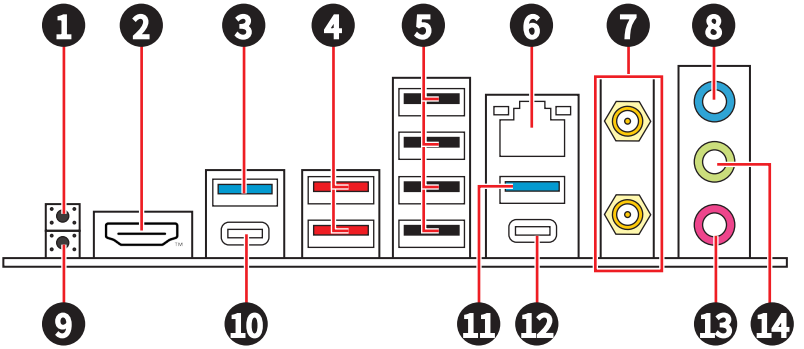

Item	Description
1	Clear CMOS button - Power off your computer. Press and hold the Clear CMOS button for about 5-10 seconds to reset BIOS to default values.
2	HDMI™ port
3	USB 5Gbps Type-A port (From CPU) • Flash BIOS port
4	USB 10Gbps Type-A ports (From CPU)
5	USB 2.0 Type-A ports (From chipset)
6	5Gbps LAN port
7	Wi-Fi Antenna connectors
8	Line-in jack
9	Flash BIOS button - Please refer to page 65 for details about updating BIOS with Flash BIOS button.
10	USB 40Gbps Type-C port (From ASM4242) • Supports DisplayPort over USB Type-C®
11	USB 5Gbps Type-A port (From X870E chipset)
12	USB 20Gbps Type-C port (From X870E chipset)
13	Mic-in jack
14	Line-out jack

LAN Port LED Status Table

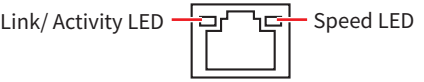

Link/ Activity LED		Speed LED	
Status	**Description**	**Status**	**Speed**
Off	No link	Off	10 Mbps
Yellow blinking slowly	Linked	Green	100Mbps/ 1Gbps/ 2.5Gbps
Yellow blinking rapidly	Data activity	Orange	5Gbps

Audio Jacks Connection

Audio jacks to headphone and microphone diagram

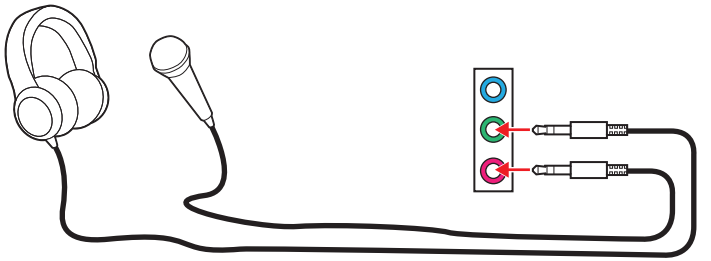

Audio jacks to stereo speakers diagram

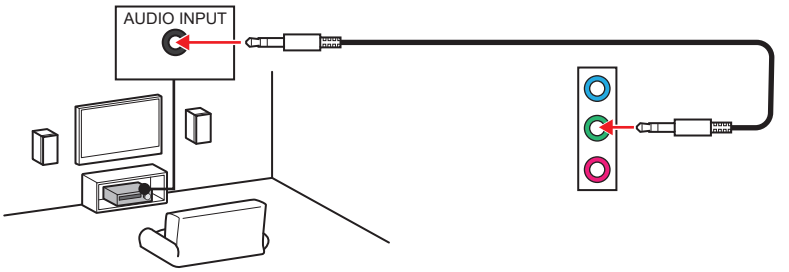

Audio jacks to 4-channel speakers diagram

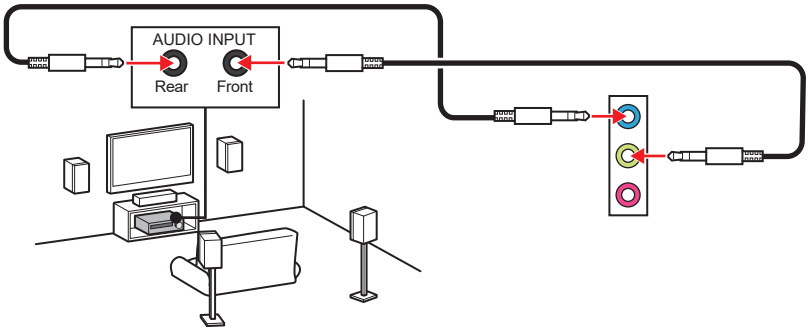

Audio jacks to 5.1-channel speakers diagram

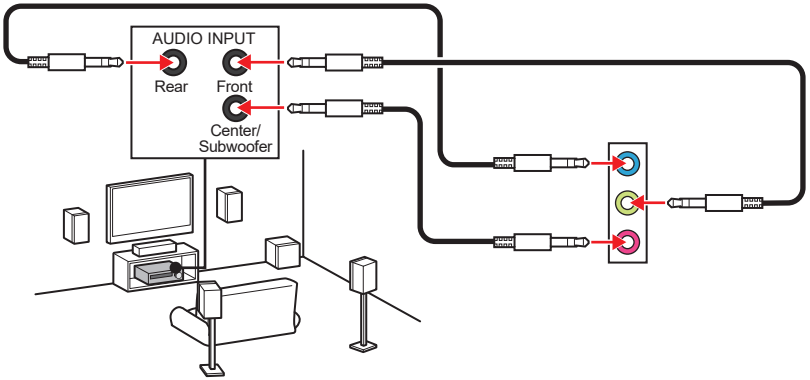

Audio jacks to 7.1-channel speakers diagram

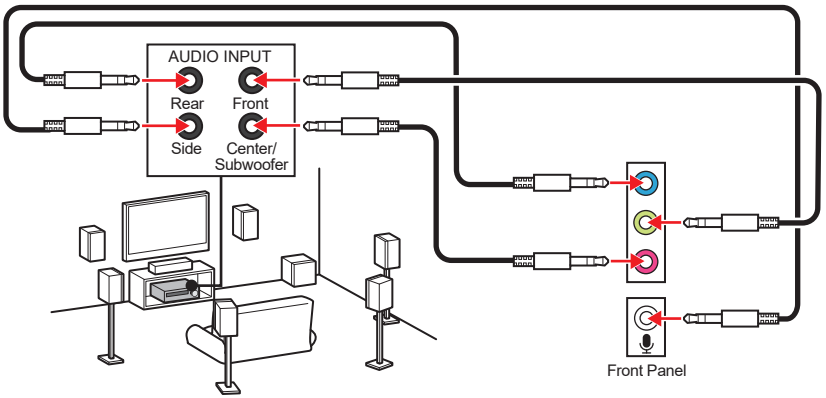

Installing Antenna

1. Connect two antenna cables tight to the Wi-Fi antenna connectors as shown.

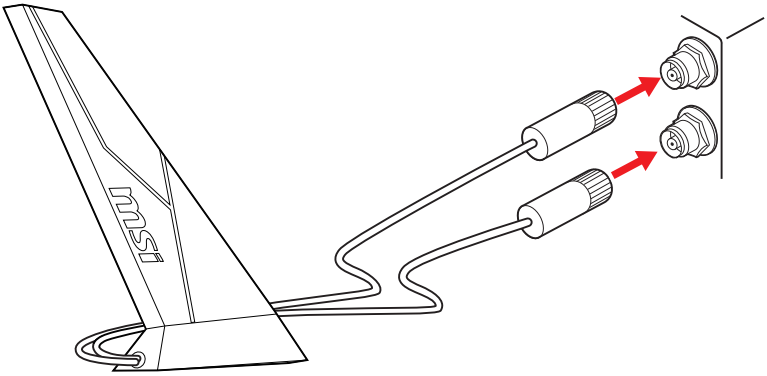

2. Place the antenna as high as possible for a better signal.

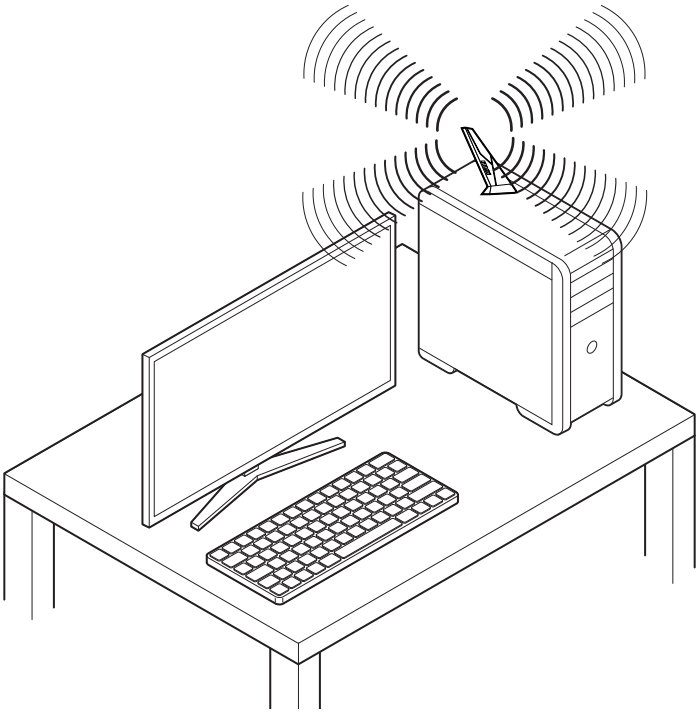

Overview of Components

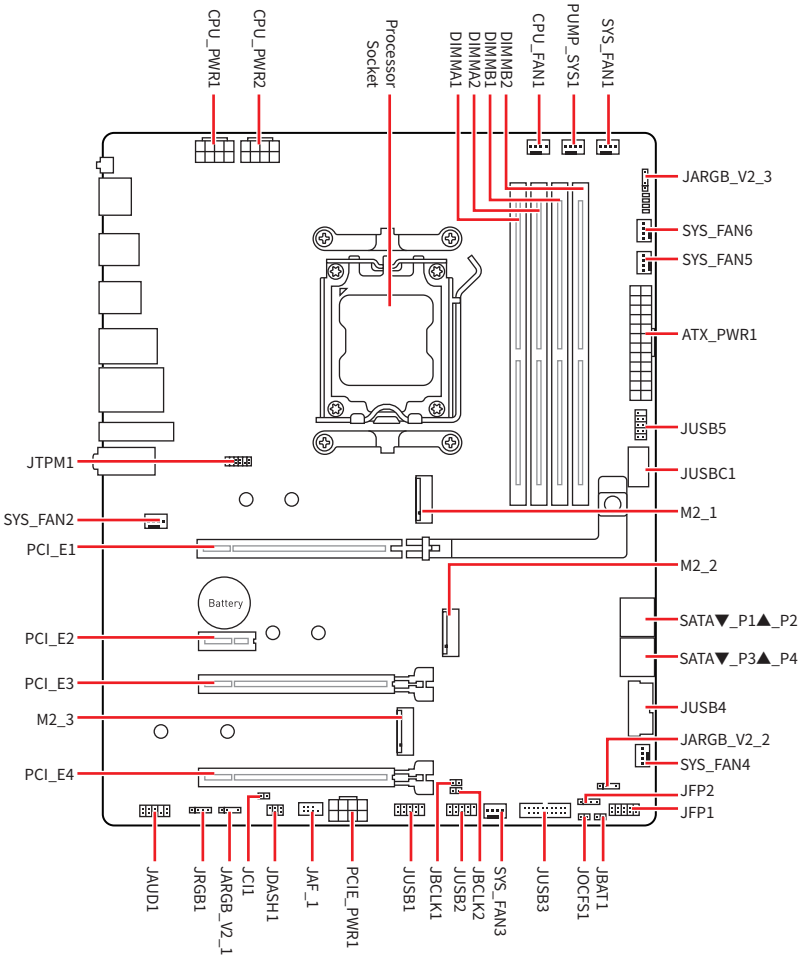

CPU Socket

The AM5 socket is a modern CPU socket designed for AMD processors. It is a key component in contemporary computing systems, providing the foundation for powerful and efficient CPUs.

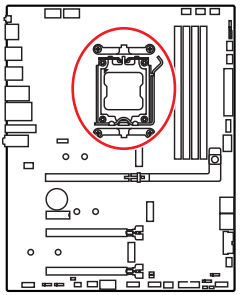

Installing the CPU to the AM5 socket

The surface of the AM5 CPU has **two notches** and a **golden triangle** to assist in correctly lining up the CPU for motherboard placement. The golden triangle is the Pin 1 indicator.

To install the CPU, align the two notches on the AM5 socket with the two corresponding notches on the CPU. Please ensure that the gold triangle on the CPU serves as the PIN 1 indicator during the installation process.

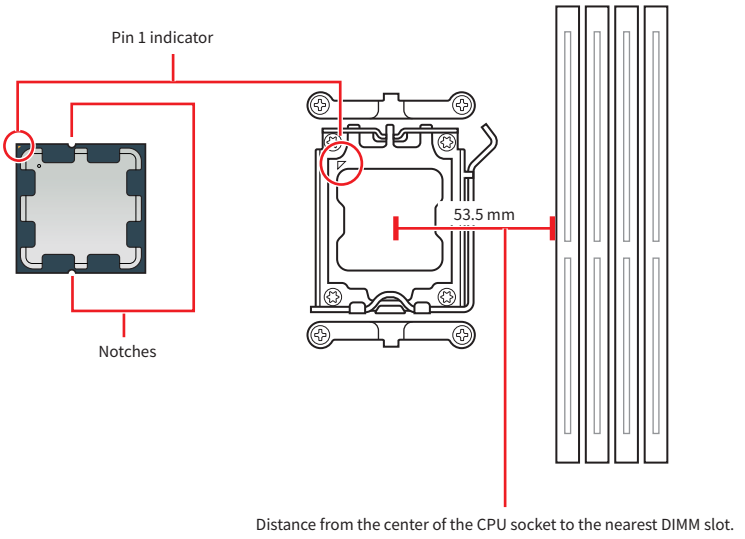

Important

- *When changing the processor, the system configuration could be cleared and reset BIOS to default values, due to the AM5 processor' s architecture.*
- *Please ensure that the motherboard and power supply are turned off and always disconnect the power cord from the power outlet before installing or removing the CPU.*
- *Please retain the CPU protective cap after installing the processor. MSI will deal with Return Merchandise Authorization (RMA) requests if only the motherboard comes with the protective cap on the CPU socket.*
- *Whenever the CPU is not installed, always protect the CPU socket pins by covering the socket with the protective cap.*
- *The CPU should only fit in one orientation, so do not force it. Gently place the CPU into the socket without applying excessive pressure.*
- *Please handle the CPU by the edges only; avoid touching the pins or the surface of the CPU. Any damage to the pins can result in a malfunctioning CPU.*
- *When installing a CPU, always remember to install a CPU heatsink. A CPU heatsink is necessary to prevent overheating and maintain system stability.*
- *Please install the CPU cooler according to the manufacturer' s instructions. Make sure it is securely a tight seal with the CPU and attached to the motherboard to ensure proper heat dissipation.*
- *Overheating can seriously damage the CPU and motherboard. Always make sure the cooling fans work properly to protect the CPU from overheating. Be sure to apply an even layer of thermal paste (or thermal tape) between the CPU and the heatsink to enhance heat dissipation.*
- *This motherboard is designed to support overclocking. Before attempting to overclock, please make sure that all other system components can tolerate overclocking. Any attempt to operate beyond product specifications is not recommended. MSI® does not guarantee the damages or risks caused by inadequate operation beyond product specifications.*

DDR5 DIMM Slots

The DDR5 DIMM slot is a dedicated connector designed to accommodate DDR5 (Double Data Rate 5) memory modules. It represents the latest standard in computer memory, providing enhanced data transfer speeds and efficiency.

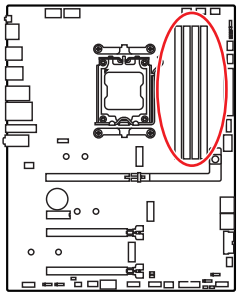

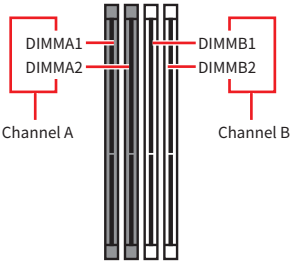

Memory module installation recommendation

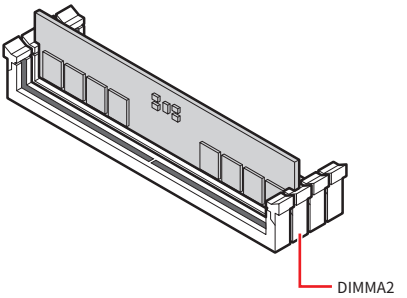

Important

*Always insert memory modules in the **DIMMA2** slot first.*

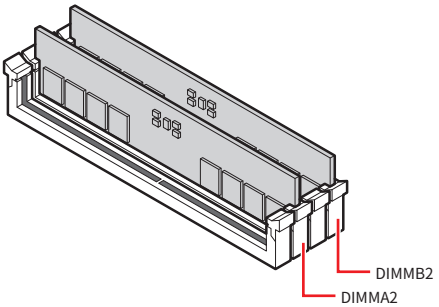

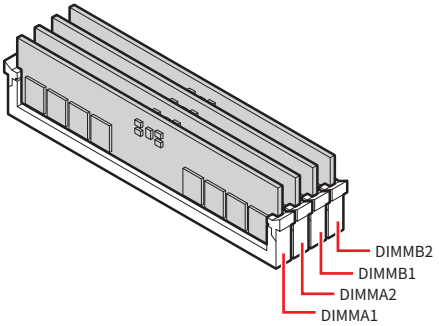

Important

- *Align the notch on the DDR5 module with the notch on the memory slot to ensure proper orientation. Do not force the module into the slot; it should slide in easily if properly aligned.*
- *To ensure system stability for Dual channel mode, memory modules must be of the same type, number and density.*
- *Some memory modules may operate at a lower frequency than the marked value when overclocking due to the memory frequency operates dependent on its Serial Presence Detect (SPD). Go to BIOS and find the **DRAM Speed** to set the memory frequency if you want to operate the memory at the marked or at a higher frequency.*
- *It is recommended to use a more efficient memory cooling system for full DIMMs installation or overclocking.*
- *The stability and compatibility of installed memory module depend on installed CPU and devices when overclocking.*
- *Please refer to www.msi.com for more information on compatible memory.*

PCI_E1~4: PCIe Expansion Slots

PCI Express (PCIe) expansion slots are used to connect add-on cards to the motherboard. These cards can provide additional functionality to your computer, such as graphics, networking, or storage.

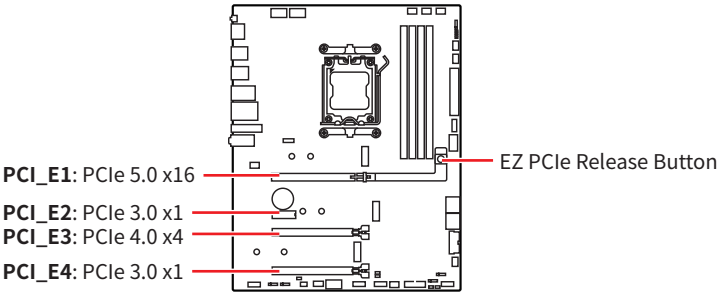

Important

- *If you install a large and heavy graphics card, you need to use a tool such as **MSI Graphics Card Bolster** to support its weight to prevent deformation of the slot.*
- *For a single PCIe x16 expansion card installation with optimum performance, using the **PCI_E1** slot is recommended.*
- *When adding or removing expansion cards, always turn off the power supply and unplug the power supply power cable from the power outlet. Read the expansion card' s documentation to check for any necessary additional hardware or software changes.*

Installing a graphics card into PCI_E1 slot

1. Ensure that the EZ PCIe Release Button is in the **locked** position. If it is unlocked, press the button to lock it.
2. Insert the graphics card into the PCIe slot.

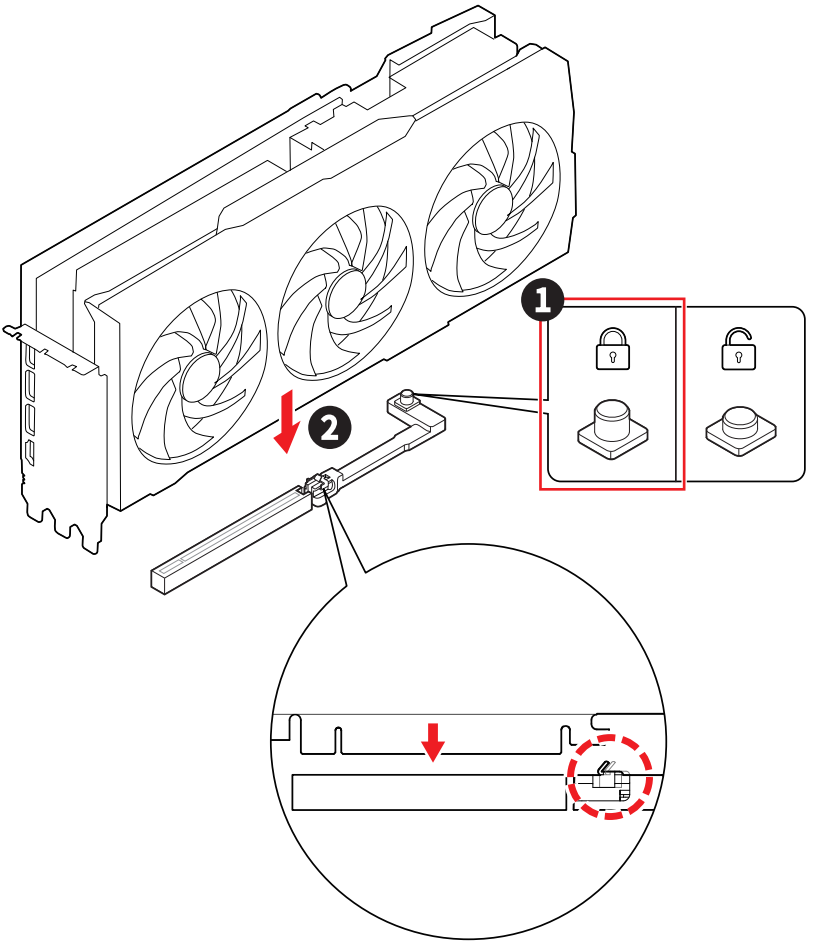

Removing a graphics card from PCI_E1 slot

1. Ensure that the EZ PCIe Release Button is in the **unlocked** position. If it is locked, press the button to unlock it.
2. Gently pull the graphics card out of the PCIe slot.

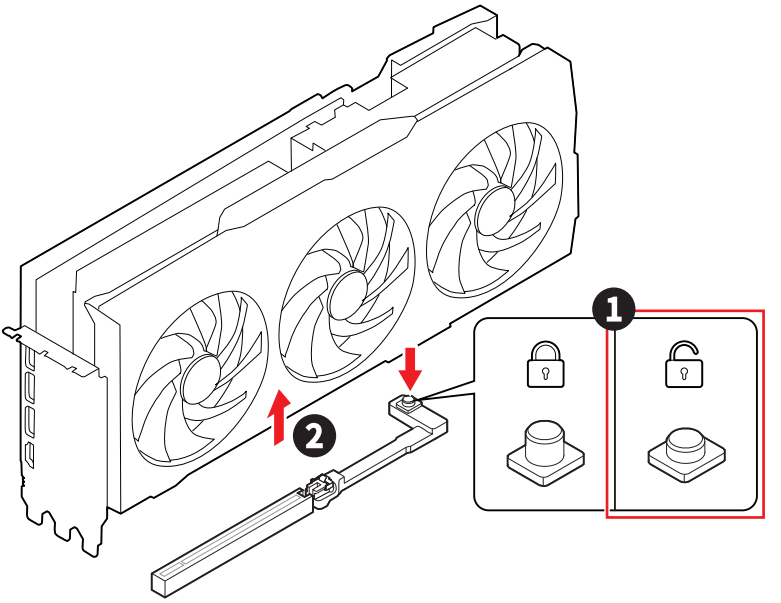

M2_1~3: M.2 Slots (Key M)

The M.2 slot is a small, high-speed expansion slot on a motherboard. It can be used to connect an M.2 SSD, which is a type of solid-state drive that offers faster performance than traditional SATA SSDs.

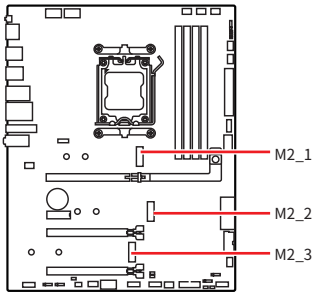

Watch the video to learn how to Install M.2 SSD with Screwless M.2 Shield Frozr heatsink.

- https://msi.gm/S7F5D000

Important

If your M.2 SSD equips its own heatsink, please note the following:

- *Remove the M.2 plate or rubber cube in the M.2 slot before installing M.2 SSD. Do not re-install the heatsink supplied with the motherboard.*
- *Ensure that the M.2 SSD heatsink you use fits the size limits to prevent damage.*

M.2 SSD Heatsink Size Restrictions

If you need to purchase an additional heatsink, please refer to the diagram below to confirm the M.2 installation space dimensions. Please also consider the height of the installed PCIe expansion card when determining M.2 installation space.

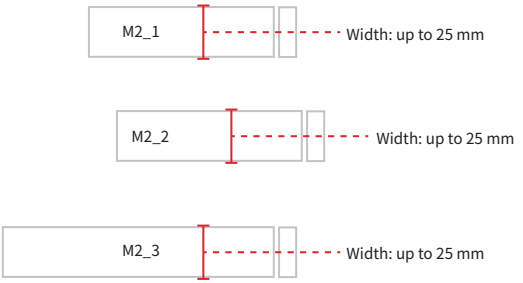

Installing M.2 module into M2_1 slot

1. Press and hold the end button of Screwless M.2 Shield Frozr heatsink.

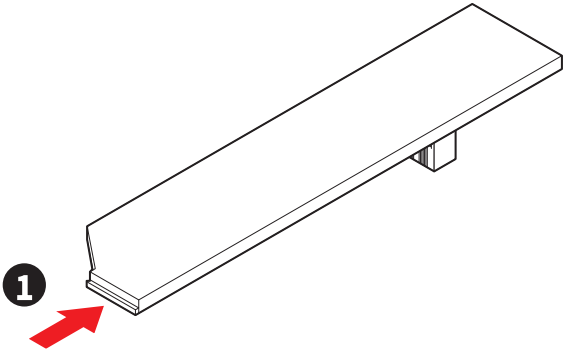

2. Slightly lift up the end part of Screwless M.2 Shield Frozr heatsink and move it forward to uninstall the heatsink.

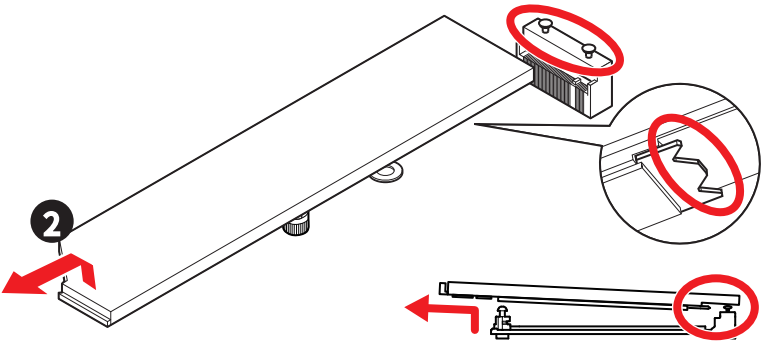

3. If you install 2260 SSD, use the included **EZ M.2 Clip II Remover**. Place the included **EZ M.2 Clip II** in the slot, use the remover to screw it in by turning clockwise, and secure it. Skip this step if you install 2280 SSD.

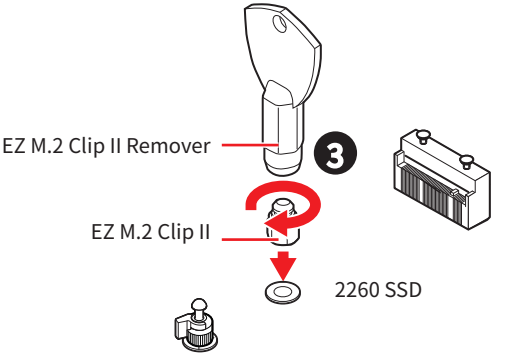

4. Insert your M.2 SSD into the M.2 slot at a 30-degree angle.
5. Rotate the EZ M.2 Clip to secure the M.2 SSD, or use the EZ M.2 Clip II, which automatically locks and secures the SSD.

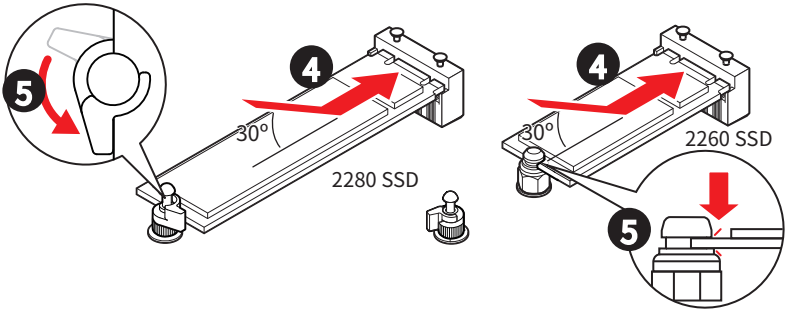

6. Remove the protective films from the thermal pads under Screwless M.2 Shield Frozr heatsink.
7. Align the notches under Screwless M.2 Shield Frozr heatsink with the tenons, and then put the heatsink back in place.
8. Press the end side of Screwless M.2 Shield Frozr heatsink to lock it completely.

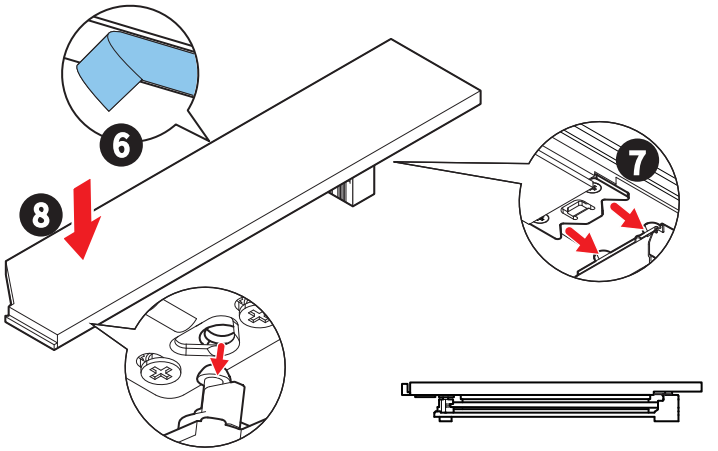

Installing M.2 module into M2_2 slot

1. Loosen the screws of M.2 Shield Frozr heatsink.
2. Lift the M.2 Shield Frozr heatsink up and remove it.

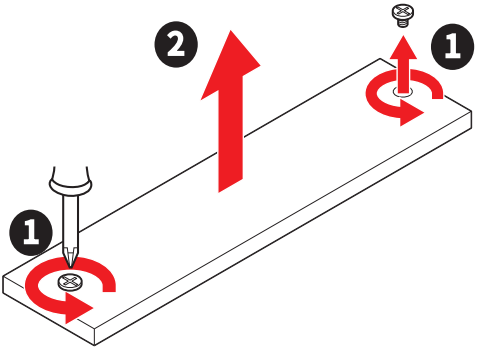

3. If you install 2260 SSD, use the included **EZ M.2 Clip II Remover**. Place the included **EZ M.2 Clip II** in the slot, use the remover to screw it in by turning it clockwise, and secure it. Skip this step if you install 2280 SSD.

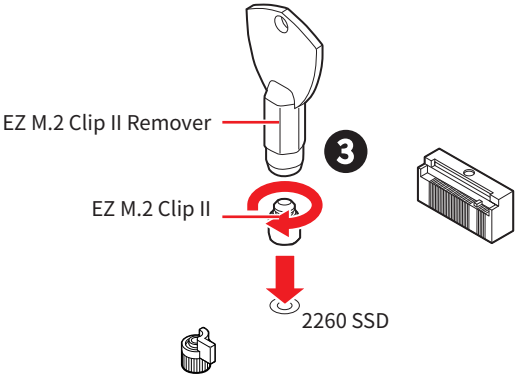

4. Insert your M.2 SSD into the M.2 slot at a 30-degree angle.
5. Rotate the EZ M.2 Clip to secure the M.2 SSD, or use the EZ M.2 Clip II, which automatically locks and secures the SSD.

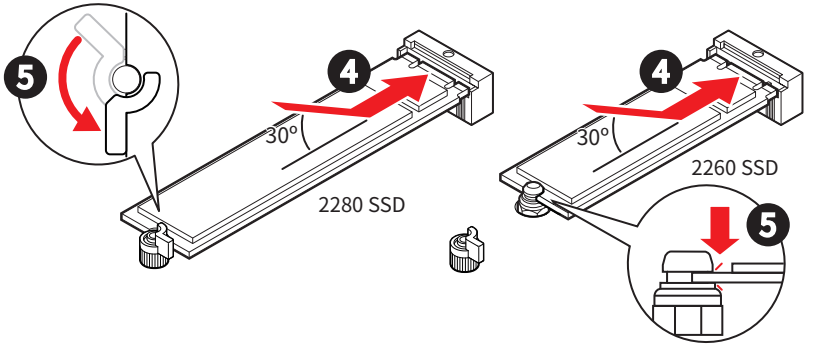

6. Remove the protective films from the thermal pads under the M.2 Shield Frozr heatsink.
7. Put the M.2 Shield Frozr heatsink back in place and secure it.

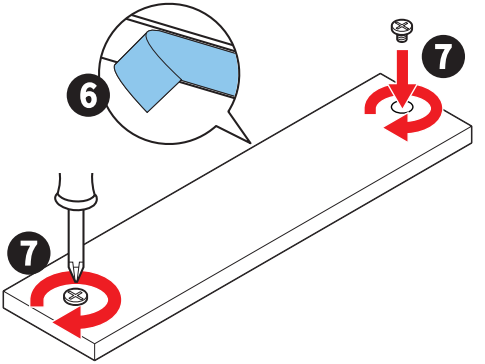

Installing M.2 module into M2_3 slot

1. Loosen the screws of M.2 Shield Frozr heatsink.
2. Lift up the M.2 Shield Frozr heatsink and remove it

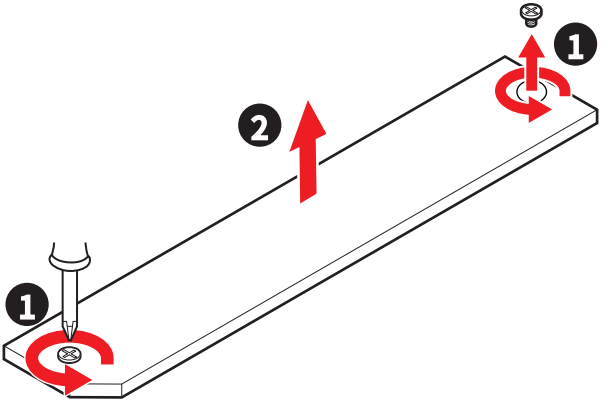

3. If you install 2280 SSD, use the included **EZ M.2 Clip II Remover**. Place the included **EZ M.2 Clip II** in the slot, use the remover to screw it in by turning it clockwise, and secure it. Skip this step if you install 22110 SSD.

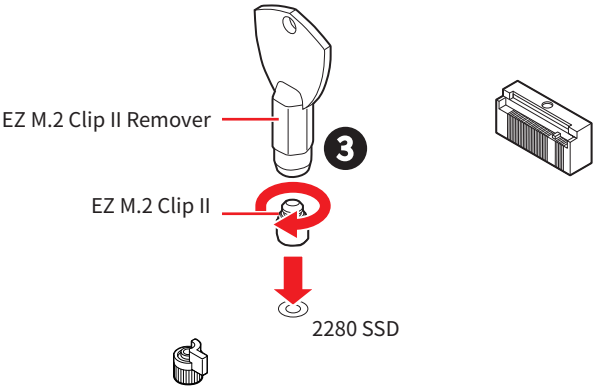

4. Insert your M.2 SSD into the M.2 slot at a 30-degree angle.
5. Rotate the EZ M.2 Clip to secure the M.2 SSD, or use the EZ M.2 Clip II, which automatically locks and secures the SSD.

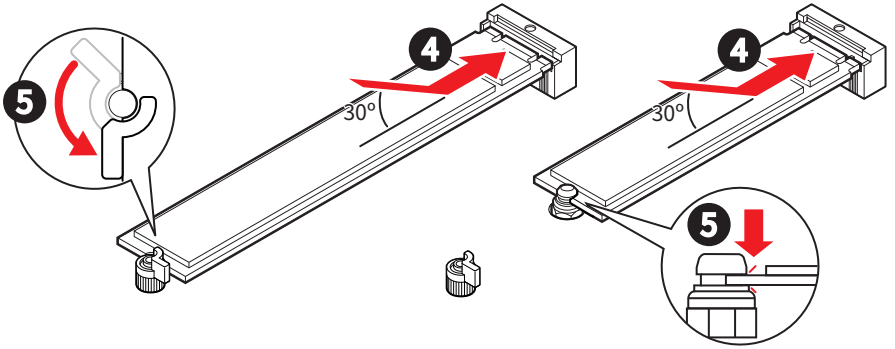

6. Remove the protective film from the thermal pad under the M.2 Shield Frozr heatsink.
7. Put the M.2 Shield Frozr heatsink back in place and secure it.

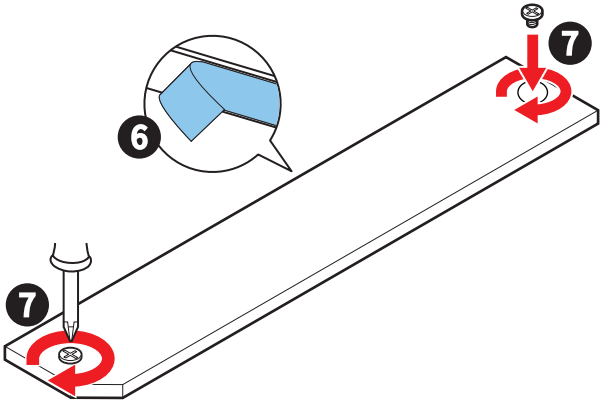

Removing M.2 SSD using the EZ M.2 Clip II

To remove M.2 SSD from the EZ M.2 Clip II, gently push the spring head on the top of the EZ M.2 Clip II outward while simultaneously pulling the M.2 SSD out.

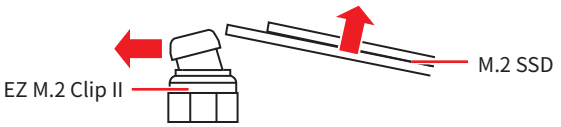

SATA_P1~P4: SATA 6Gb/s Connectors

These connectors are SATA 6Gb/s interface ports. Each connector can connect to one SATA device.

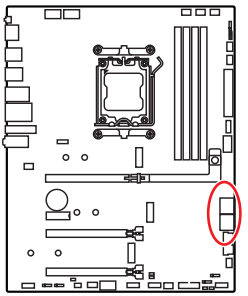

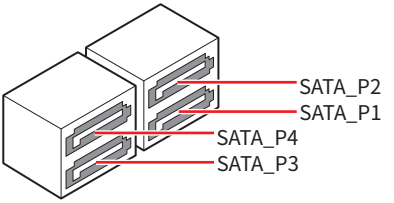

Important

- *Please do not fold the SATA cable at a 90-degree angle. Data loss may result during transmission otherwise.*
- *SATA cables have identical plugs on either sides of the cable. However, it is recommended that the flat connector be connected to the motherboard for space saving purposes.*

JAUD1: Front Audio Connector

This connector allows you to connect audio jacks on the front panel.

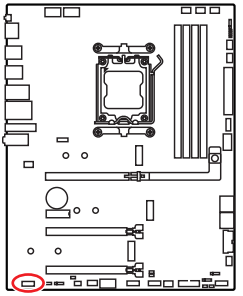

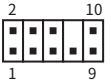

Pin	Signal Name	Pin	Signal Name
1	MIC L	2	Ground
3	MIC R	4	NC
5	Head Phone R	6	MIC Detection
7	SENSE_SEND	8	No Pin
9	Head Phone L	10	Head Phone Detection

JFP1, JFP2: Front Panel Connectors

The JFP1 connector controls the power on, power reset, and the LEDs on your PC case/ chassis. Power Switch/ Reset Switch headers allow you to connect power button/ reset button. Power LED header connects to LED light on the PC case, and HDD LED header indicates the activity of the hard disk. The JFP2 connector is for Buzzer and Speaker. For connecting the cables from your PC case to the correct pins on the motherboard, please refer to the following images.

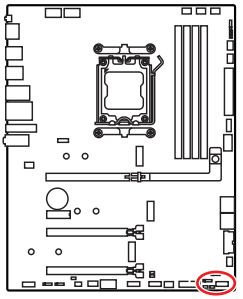

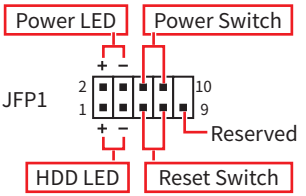

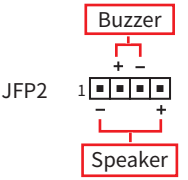

Important

Make sure to connect the Power LED and HDD LED cables to the corresponding positive and negative pins on the motherboard. Otherwise, the LEDs will not function properly.

Using EZ Front Panel Cable

The **EZ Front Panel Cable** allows you to first connect and integrate the PC case' s front panel connectors, making it easier to install into the **JFP1** connector. Attach **Power SW**, **Reset SW**, **Power LED (+ to +, - to -)**, and **HDD LED (+ to +, - to -)** to the matching pins on the Front Panel Cable, then plug the **EZ Front Panel Cable** into the **JFP1** connector.

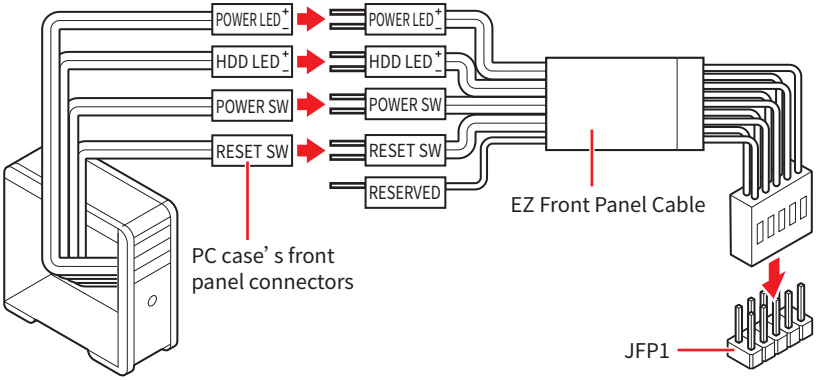

CPU_PWR1~2, ATX_PWR1, PCIE_PWR1: Power Connectors

These power connectors allow you to connect an ATX power supply.

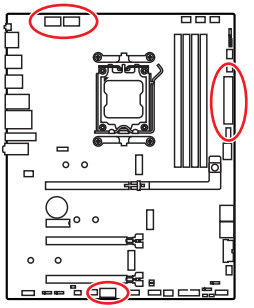

CPU_PWR1~2



ATX_PWR1

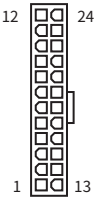

PCIE_PWR1

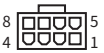

CPU_PWR1~2

Pin	Signal Name	Pin	Signal Name
1	Ground	2	Ground
3	Ground	4	Ground
5	+12V	6	+12V
7	+12V	8	+12V

ATX_PWR1

Pin	Signal Name	Pin	Signal Name
1	+3.3V	2	+3.3V
3	Ground	4	+5V
5	Ground	6	+5V
7	Ground	8	PWR OK
9	5VSB	10	+12V
11	+12V	12	+3.3V
13	+3.3V	14	-12V
15	Ground	16	PS-ON#
17	Ground	18	Ground
19	Ground	20	Res
21	+5V	22	+5V
23	+5V	24	Ground

PCIE_PWR1

Pin	Signal Name	Pin	Signal Name
1	+12V	2	+12V
3	+12V	4	SENS1
5	Ground	6	SENS0
7	Ground	8	Ground

Important

Make sure that all the power cables are securely connected to a proper ATX power supply to ensure stable operation of the motherboard.

JCI1: Chassis Intrusion Connector

This connector allows you to connect the chassis intrusion switch cable.

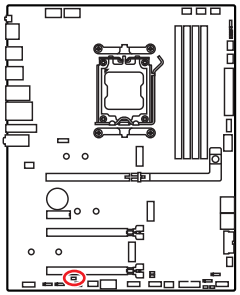



Normal (default)



Trigger the chassis intrusion event

Using chassis intrusion detector

1. Connect the **JCI1** connector to the chassis intrusion switch/ sensor on the chassis.
2. Close the chassis cover.
3. Go to **BIOS > Security > Chassis Intrusion Configuration**.
4. Set **Chassis Intrusion** to **Enabled**.
5. Press **F10** to save and exit and then press the **Enter** key to select **Yes**.
6. Once the chassis cover is opened again, a warning message will be displayed on screen when the computer is turned on.

Resetting the chassis intrusion warning

1. Go to **BIOS > Security > Chassis Intrusion Configuration**.
2. Set **Chassis Intrusion** to **Reset**.
3. Press **F10** to save and exit and then press the Enter key to select **Yes**.

JOC_FS1: Safe Boot Jumper

This jumper is used for Safe Boot. When this jumper is enabled, the system will boot with default settings and lower PCIe (from CPU) mode.

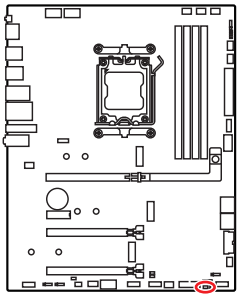



Normal (default)

Boot with the saved BIOS settings.



Enabled

Apply the BIOS default settings and lower PCIe (from CPU) mode for Safe Boot

JUSBC1: USB 10Gbps Type-C® Front Panel Connector

This USB connector allows you to connect to the USB Type-C® port on the front panel and supports data transfer speeds of up to 10Gbps. It features a user-friendly design that ensures proper orientation when connecting the cable.

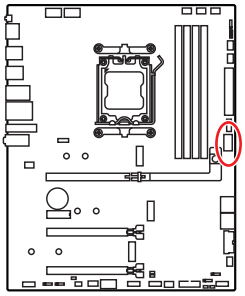

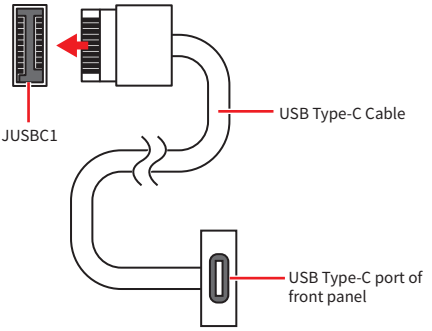

JUSB3~4: USB 5Gbps Connectors

These USB connectors allow you to connect to USB ports on the chassis panel and supports data transfer speeds of up to 5Gbps.

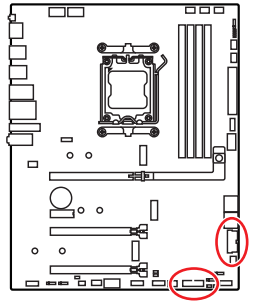

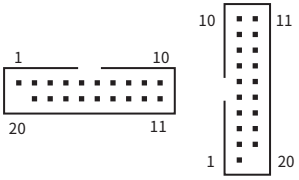

Pin	Signal Name	Pin	Signal Name
1	Power	2	USB3_RX_DN
3	USB3_RX_DP	4	Ground
5	USB3_TX_C_DN	6	USB3_TX_C_DP
7	Ground	8	USB2.0-
9	USB2.0+	10	Ground
11	USB2.0+	12	USB2.0-
13	Ground	14	USB3_TX_C_DP
15	USB3_TX_C_DN	16	Ground
17	USB3_RX_DP	18	USB3_RX_DN
19	Power	20	No Pin

Important

Note that the Power and Ground pins must be connected correctly to avoid possible damage.

JUSB1~2, 5: USB 2.0 Connectors

These USB connectors allow you to connect to USB ports on the chassis panel and supports data transfer speeds of up to 480Mbps.

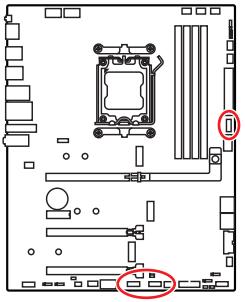

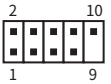

Pin	Signal Name	Pin	Signal Name
1	VCC	2	VCC
3	USB0-	4	USB1-
5	USB0+	6	USB1+
7	Ground	8	Ground
9	No Pin	10	NC

Important

- *Note that the VCC and Ground pins must be connected correctly to avoid possible damage.*
- *In order to recharge your iPad, iPhone and iPod through USB ports, please install MSI Center utility.*

JTPM1: TPM Module Connector

This connector is designed for a Trusted Platform Module (TPM) to enable secure storage of sensitive data and perform cryptographic operations that ensure the integrity of your system.

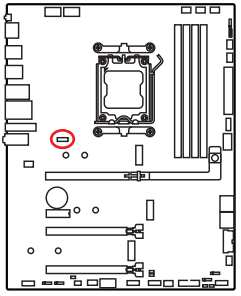

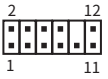

Pin	Signal Name	Pin	Signal Name
1	SPI Power	2	SPI Chip Select
3	Master In Slave Out (SPI Data)	4	Master Out Slave In (SPI Data)
5	Reserved	6	SPI Clock
7	Ground	8	SPI Reset
9	Reserved	10	No Pin
11	Reserved	12	Interrupt Request

Important

The TPM module is not included and must be purchased separately.

CPU_FAN1, PUMP_SYS1, SYS_FAN1~6: Fan Connectors

Fan connectors can be divided into two categories: PWM Mode and DC Mode. PWM Mode fan connectors provide a constant 12V output and adjust fan speed with a speed control signal. DC Mode fan connectors control fan speed by changing voltage. Please refer to the following specification table for the fan connector mode of your motherboard.

You can control fans in **BIOS> HARDWARE MONITOR** panel. Enabling Smart Fan Mode will regulate fan speed based on CPU or system temperature. Disabling Smart Fan Mode will set the fan to full speed.

Important

*You can set DC or PWM in **HARDWARE MONITOR** panel to your fan type if your motherboard supports it. Make sure fans are working properly after switching the PWM/ DC mode.*

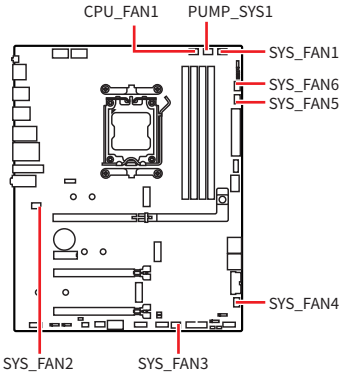



PWM Mode pin definition

Pin	Signal Name	Pin	Signal Name
1	Ground	2	+12V
3	Sense	4	Speed Control Signal

DC Mode pin definition

Pin	Signal Name	Pin	Signal Name
1	Ground	2	Voltage Control
3	Sense	4	NC

Fan specifications for fan connectors

Connector	Fan mode	Max. current	Max. power
CPU_FAN1	Auto mode	2A	24W
PUMP_SYS1	PWM mode	3A	36W
SYS_FAN1~6	Auto mode	1A	12W

Important

The auto mode fan connectors can automatically detect PWM and DC modes.

JBAT1: Clear CMOS (Reset BIOS) Jumper

There is CMOS memory onboard that is external powered from a battery located on the motherboard to save system configuration data. If you want to clear the system configuration, set the jumpers to clear the CMOS memory.

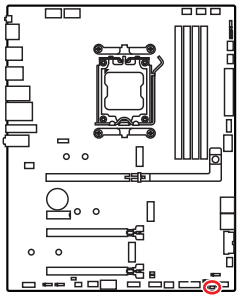



Keep Data
(default)



Clear CMOS/
Reset BIOS

Resetting BIOS to default values

1. Power off the computer and unplug the power cord.
2. Use a jumper cap to short **JBAT1** for about 5-10 seconds.
3. Remove the jumper cap from **JBAT1**.
4. Plug the power cord and Power on the computer.

JDASH1 : Tuning Controller connector

This connector is used to connect an optional Tuning Controller module.

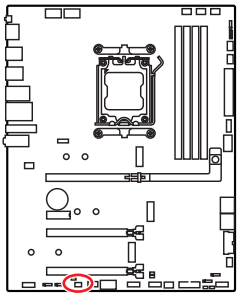



Pin	Signal Name	Pin	Signal Name
1	No Pin	2	NC
3	MCU_SMB_SCL_M	4	MCU_SMB_SDA_M
5	VCC5	6	Ground

JBCLK1~2: BCLK Frequency Jumpers

These jumpers are provided for overclocking enthusiasts to fine-tune the CPU Base Clock (BCLK). You can connect momentary switches to these jumpers for manual, real-time BCLK adjustment while the system is operating.

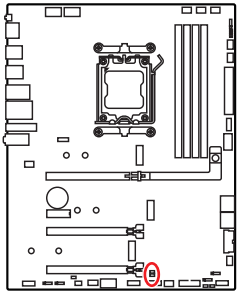

JBCLK1 (Increase Frequency)

JBCLK2 (Decrease Frequency)

Important

- *The overclocking results may vary depending on the installed CPU.*
- *Adjusting BCLK is an overclocking activity that may cause system instability or permanent damage, and it will void your product warranty.*
- *Ensure that your cooling system is adequate to handle the increased heat.*
- *If BCLK overclocking causes system instability or crashes, please clear CMOS to restore factory settings.*

JRGB1: RGB LED connector

The JRGB connector allows you to connect the 5050 RGB LED strips 12V.

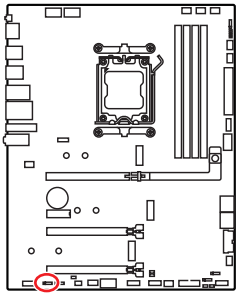



Pin	Signal Name	Pin	Signal Name
1	+12V	2	G
3	R	4	B

RGB LED Strip Connection

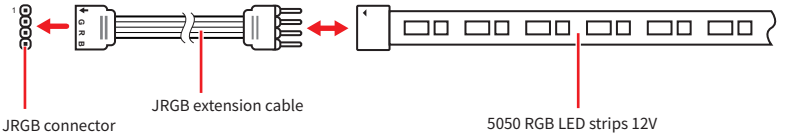

RGB LED Fan Connection

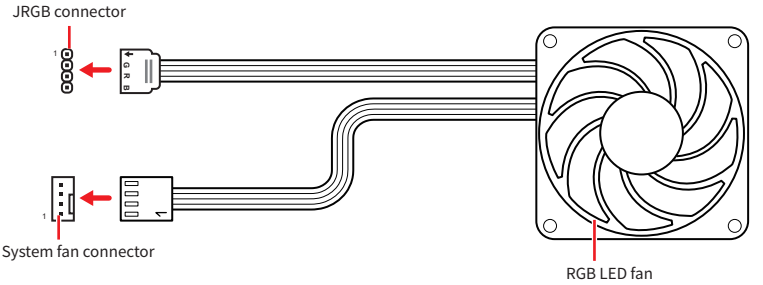

Important

- *The JRGB connector supports up to 2 meters continuous 5050 RGB LED strips (12V/G/R/B) with the maximum power rating of 3A (12V).*
- *Always turn off the power supply and unplug the power cord from the power outlet before installing or removing the RGB LED strip.*
- *Please use MSI' s software to control the extended LED strip.*

JARGB_V2_1~3: A-RAINBOW V2 (ARGB Gen2) LED connectors

The JARGB_V2 connectors allow you to connect the ARGB Gen2 and the ARGB-based LED strips. The JARGB_V2 connector supports up to 180 individually addressable RGB LEDs with maximum power rating of 3A (5V).

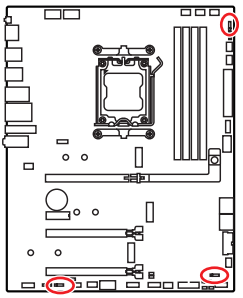



Pin	Signal Name	Pin	Signal Name
1	+5V	2	Data
3	No Pin	4	Ground

Addressable RGB LED Strip Connection

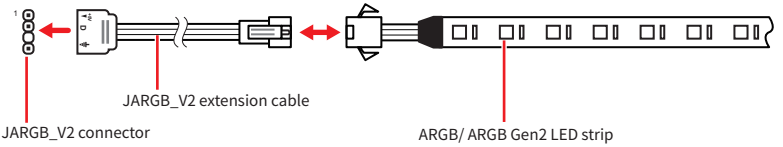

Addressable RGB LED Fan Connection

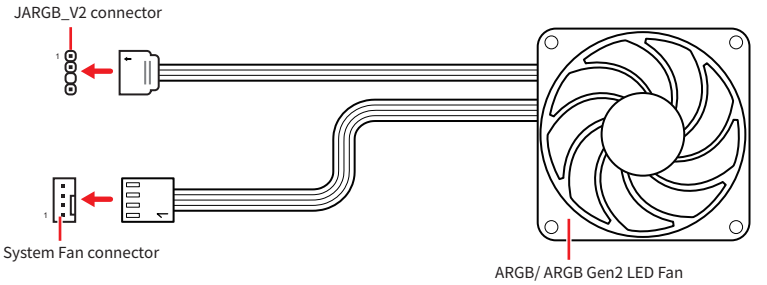

CAUTION

Do not connect the wrong type of LED strips. The JRGB connector and the JARGB_V2 connector provide different voltages, and connecting the ARGB 5V LED strip to the JRGB connector will result in damage to the LED strip.

Important

- *If you connect the ARGB Gen1 and ARGB Gen2 LED strips into the same connector, it may cause some issues. Please do not mix the ARGB Gen1 LED and the ARGB Gen2 LED strips together.*
- *It is recommended that you install LED strips with the same specification to achieve the best effects.*
- *Always turn off the power supply and unplug the power cord from the power outlet before installing or removing the addressable RGB LED strip.*
- *Please use MSI' s software to control the extended LED strip.*

JAF_1: EZ Conn-Header V1

This header is designed to connect MPG EZ120 ARGB fans, simplifying cable routing. It also allows you to connect the ARGB Gen1 and Gen2 LED strips and system fans.

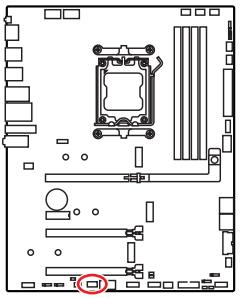

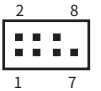

Pin	Signal Name	Pin	Signal Name
1	Ground	2	5V
3	12V	4	DATA
5	Sense	6	Ground
7	Speed Control Signal	8	No Pin

MPG EZ120 ARGB Fan Connection

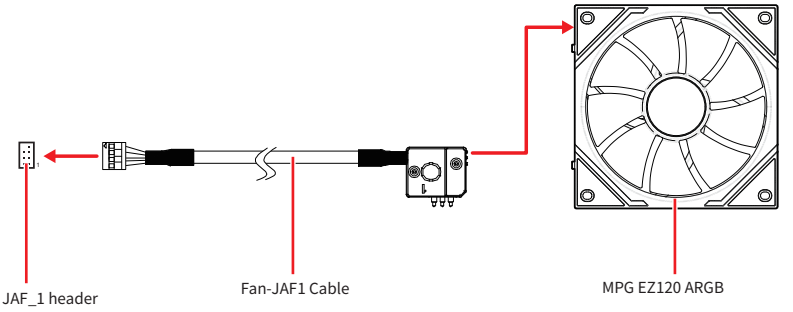

Addressable RGB LED Fan Connection

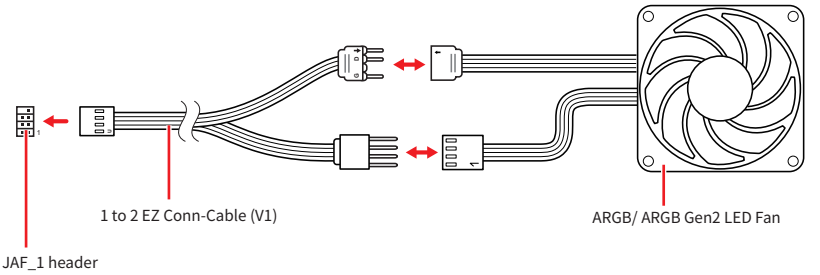

Important

- *The Fan-JAF1 Cable is included in the packaging of MPG EZ120 ARGB.*
- *For more information on how to install MPG EZ120 ARGB, please refer to https://msi.gm/S5035E56.*

Onboard LEDs

EZ Debug LED

These LEDs indicate the debug status of the motherboard.

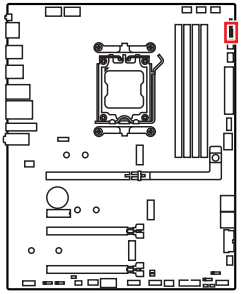

LED Color	Status
Red	CPU is not detected or fail
Yellow	DRAM is not detected or fail
White	GPU is not detected or fail
Green	Booting device is not detected or fail

EZ Memory Detection LED

This LED indicates that the memory module' s power is not detected. If any memory module loses power, this LED will light up.

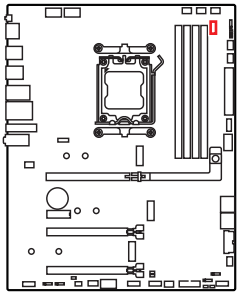

Installing OS, Drivers & MSI Center

Please download and update the latest utilities and drivers at www.msi.com

Installing Windows 11

1. Power on the computer.
2. Insert the Windows 11 installation disc/ USB into your computer.
3. Press the **Restart** button on the computer case.
4. Press **F11** key during the computer POST (Power-On Self Test) to get into Boot Menu.
5. Select the Windows 11 installation disc/USB from the Boot Menu.
6. Press any key if screen shows **Press any key to boot from CD or DVD...** message. If not, please skip this step.
7. Follow the instructions on the screen to install Windows 11.

Installing Drivers with MSI Driver Utility Installer

Important

- *Some new network chips have not been natively supported by Windo—ws 11. It is recommended that the **LAN driver** be installed before installing drivers with MSI Driver Utility Installer. Please refer to www.msi.com to install the LAN driver for your motherboard.*
- *The MSI Driver Utility Installer will only pop up once. If you cancel or close it during the process, please refer to the Live Update chapter of the MSI Center manual to install the drivers. You can also go to www.msi.com to search your motherboard and download the drivers.*
- *MSI Driver Utility Installer needs to be installed over the internet.*

1. Start up your computer in Windows 11.
2. Select **Start** > **Settings** > **Windows Update**, and then select **Check** for updates.
3. MSI Driver Utility Installer will pop up automatically.

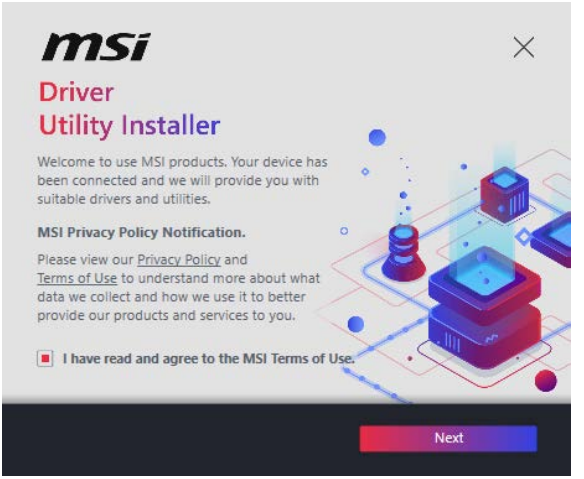

4. Select the **I have read and agree to the MSI Terms of Use** check box, and then click **Next**.

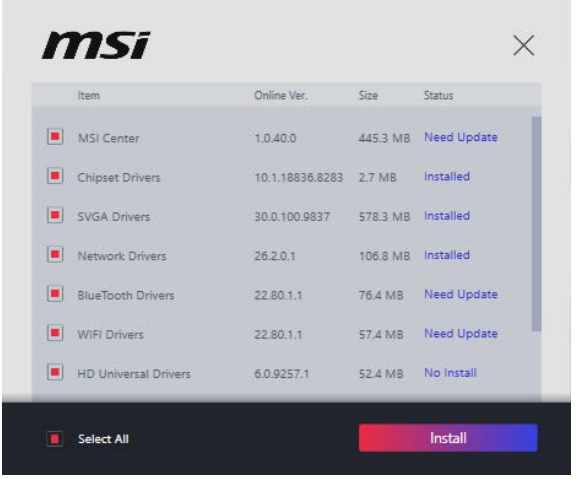

5. Check the **Select All** checkbox in the lower-left corner and click **Install** to install MSI Center and drivers. The installation progress will be shown at the bottom.

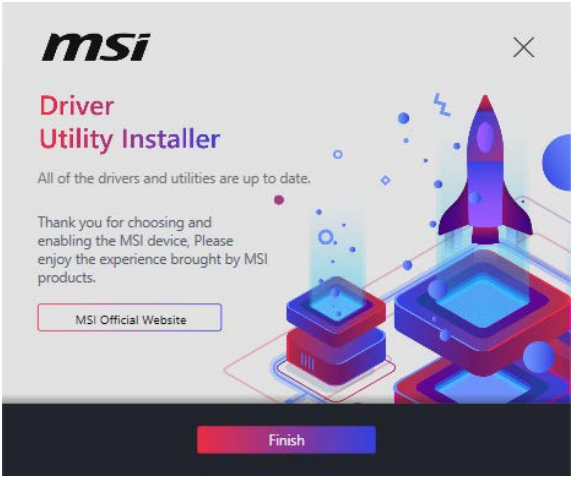

6. Once the progress has completed, click **Finish**.

MSI Center

MSI Center is an application that helps you easily optimize game settings and smoothly use content creation softwares. It also allows you to control and synchronize LED light effects on PCs and other MSI products. With MSI Center, you can customize ideal modes, monitor system performance, and adjust fan speed.

MSI Center User Guide

If you would like to know more information about MSI Center, please refer to https://msi.gm/S391169E

or scan the QR code to access.

Important

Functions may vary depending on the product you have.

UEFI BIOS

MSI UEFI BIOS is compatible with UEFI (Unified Extensible Firmware Interface) architecture. UEFI has many new functions and advantages that traditional BIOS cannot achieve, and it will completely replace BIOS in the future. The MSI UEFI BIOS uses UEFI as the default boot mode to take full advantage of the new chipset' s capabilities. However, it still has a CSM (Compatibility Support Module) mode to be compatible with older devices. That allows you to replace legacy devices with UEFI compatible devices during the transition.

Important

The term BIOS in this user guide refers to UEFI unless otherwise noted.

UEFI advantages

- Fast booting - UEFI can directly boot the operating system and save the BIOS self-test process. And also eliminates the time to switch to CSM mode during POST.
- Supports for hard drive partitions larger than 2 TB.
- Supports more than 4 primary partitions with a GUID Partition Table (GPT).
- Supports unlimited number of partitions.
- Supports full capabilities of new devices - new devices may not provide backward compatibility.
- Supports secure startup - UEFI can check the validity of the operating system to ensure that no malware tampers with the startup process.

Incompatible UEFI cases

- **32-bit Windows operating system** - this motherboard supports only Windows 11 64-bit operating system.
- **Older graphics card** - the system will detect your graphics card. If you use older graphics cards, it may display a warning message **There is no GOP (Graphics Output protocol) support detected in this graphics card**.

Important

We recommend that you replace it with a graphics card supporting GOP/UEFI or use CPU with integrated graphics for having normal function.

BIOS Setup

The default settings offer the optimal performance for system stability in normal conditions. You should **always keep the default settings** to avoid possible system damage or failure booting unless you are familiar with BIOS.

Important

- *BIOS items are continuously updated for better system performance. Therefore, the description may be slightly different from the latest BIOS and should be for reference only. You could also refer to the **HELP** information panel in BIOS.*
- *The BIOS screens, options and settings will vary depending on the products you have.*

BIOS User Guide

If you' d like to know more instructions on setting up the BIOS, please refer to https://msi.gm/S53FE767
or scan the QR code to access.

Important

The appearance of the BIOS user guide may differ based on your motherboard model. Please consult your motherboard' s BIOS for specific settings and options.

Entering BIOS Setup

Press **Delete** key, when the **Press DEL key to enter Setup Menu, F11 to enter Boot Menu** message appears on the screen during the boot process.

Function key

+/ -: Increase / decrease the value

Enter: Select the item

ESC: Exit

Tab: Next selection

Ctrl+F: Enter Search menu

F1: General Help list

F2: Add/ Remove a favorite item

F3: Enter Favorites menu

F4: Enter CPU core center & memory center information menu

F5: Enter Hardware Monitor menu

F6: Load optimized defaults

F7: Switch between Advanced mode and EZ mode

F8: Load Overclocking Profile

F9: Save Overclocking Profile

F10: Save Change and Reset*

F12: Take a screenshot and save it to USB flash drive (FAT/ FAT32 format only).

* Pressing **F10** displays a confirmation message summarizing your changes. Select **Yes** or **No** to confirm.

How to find the BIOS version?

After entering the BIOS, find the BIOS version in the information box.

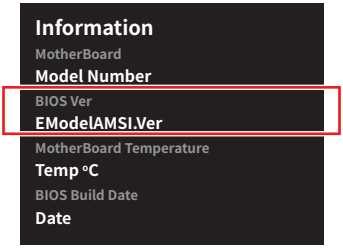

Resetting BIOS

You might need to restore the default BIOS setting to solve certain problems. You can use the following methods to reset the BIOS settings.

- Go to BIOS and press **F6** to load optimized defaults.
- Short the **Clear CMOS** jumper on the motherboard.
- Press the **Clear CMOS** button on the rear I/O panel. If your motherboard doesn' t have this button, skip this step.

Important

*Be sure the computer is off before clearing CMOS data. Please refer to the **Clear CMOS** jumper/ button section for resetting BIOS.*

Updating BIOS

Updating BIOS with M-FLASH

Before starting the M-Flash process, make sure you have:

- A USB flash drive with a capacity of 32GB or less that is formatted to FAT32.

Important

M-Flash only supports FAT32 format, and the USB flash drive should not exceed 32GB.

- A computer with internet access.

Please follow the steps below to update BIOS:

1. Download the latest BIOS file from the MSI website that matches your motherboard model, and save it to the USB flash drive.
2. If your motherboard has a Multi-BIOS switch, switch to the target BIOS ROM.
3. Insert the USB flash drive into your motherboard' s USB port.
4. Enter flash mode by either:
   - Rebooting and pressing **Ctrl + F5** during POST, then clicking **Yes** to reboot the system.
   - Rebooting and pressing **Del** during POST to enter BIOS, then clicking the M-FLASH button and clicking **Yes** to reboot.
5. Select a BIOS file from the **M-FLASH File** menu and press **Enter**.
6. When prompted by a File Check message, click **Yes** to start the BIOS update.

Once the update reaches 100%, the system will reboot automatically.

Updating BIOS with MSI Center

Before updating:

- Ensure the LAN driver is installed, and the internet connection is working properly.
- Close all other applications before updating the BIOS.

To update BIOS:

1. Install and launch MSI Center, then go to **Support** page.
2. Select **Live Update** and click on **Advance** button.
3. Select the BIOS file and click on **Install** button.
4. The installation reminder will appear, then click the **Install** button.

The system will automatically restart to update the BIOS. Once the flashing process is complete, the system will restart.

Updating BIOS with Flash BIOS Button

1. Download the latest BIOS file from the MSI website that matches your motherboard model.
2. Rename the BIOS file to **MSI.ROM**, and save it to the root directory of a USB flash device.
3. Connect the power supply to **CPU_PWR1** and **ATX_PWR1**. (You don' t need to install the CPU and memory.)
4. Plug the USB flash device with the **MSI.ROM** file into the **Flash BIOS Port** on the rear I/O panel.
5. Press the **Flash BIOS Button** to start flashing the BIOS. The LED will start flashing to indicate the process has begun.

The LED will turn off when the process is complete.

Block Diagram

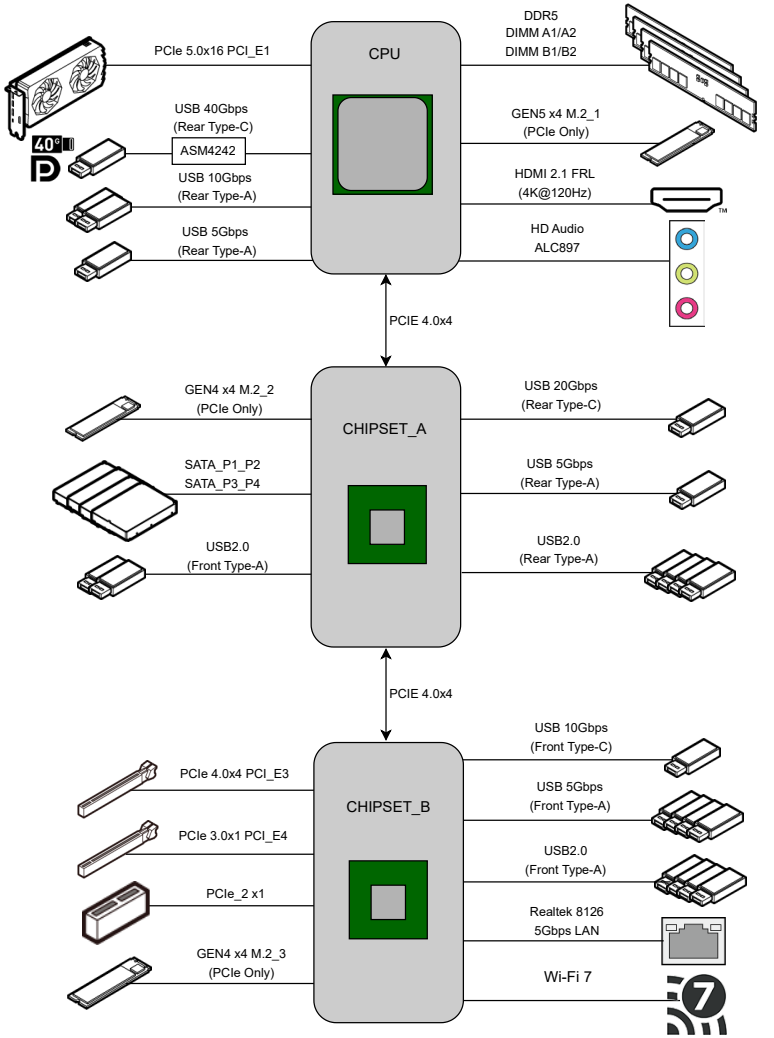

Regulatory Notices

FCC-B Radio Frequency Interference Statement

This equipment has been tested and found to comply with the limits for a Class B digital device, pursuant to part 15 of the FCC rules. These limits are designed to provide reasonable protection against harmful interference in a residential installation. This equipment generates, uses and radiates radio frequency energy, and, if not installed and used in accordance with the instructions, may cause harmful interference to radio communications. However, there is no guarantee that interference will not occur in a particular installation. If this equipment does cause harmful interference to radio or television reception, which can be determined by turning the equipment off and on, the user is encouraged to try to correct the interference by one or more of the following measures:

- Reorient or relocate the receiving antenna.
- Increase the separation between the equipment and receiver.
- Connect the equipment into an outlet on a circuit different from that to which the receiver is connected.

NOTE

- The changes or modifications not expressly approved by the party responsible for compliance could void the user' s authority to operate the equipment.
- Shield interface cables and AC power cord, if any, must be used in order to comply with the emission limits.

FCC Conditions

This device complies with part 15 of the FCC Rules. Operation is subject to the following two conditions:

- This device may not cause harmful interference.
- This device must accept any interference received, including interference that may cause undesired operation.

MSI Computer Corp.

901 Canada Court, City of Industry, CA 91748, USA

(626)913-0828

www.msi.com

CE Conformity

Products bearing the CE marking comply with one or more of the following EU Directives as may be applicable:

- RED 2014/53/EU
- Low Voltage Directive 2014/35/EU
- EMC Directive 2014/30/EU
- RoHS Directive 2011/65/EU
- Implementing measure Directive 2009/125/EC of ESPR Regulation (EU) 2024/1781

Compliance with these directives is assessed using applicable European Harmonized Standards.
For any support regarding the EU General Product Safety Regulation (GPSR), please contact MSI Computer Europe B.V. via https://msi.gm/gpsr Churchilllaan 202, 5705 BK Helmond, the Netherlands.

Products with Radio Functionality (EMF)

This product incorporates a radio transmitting and receiving device. For computers in normal use, a separation distance of 20 cm ensures that radio frequency exposure levels comply with EU requirements. Products designed to be operated at closer proximities, such as tablet computers, comply with applicable EU requirements in typical operating positions. Products can be operated without maintaining a separation distance unless otherwise indicated in instructions specific to the product.

Restrictions for Products with Radio Functionality

WLAN 5150-5350 MHz:

The WiFi operating in the band 5150-5350 MHz shall be restricted to indoor use in the European Union.

WLAN 7:

a. Low Power Indoor (LPI) Wi-Fi 5.945-6.425 GHz devices:

   The device is restricted to indoor use only when operating in the 5945 to 6425 MHz frequency range in the European Union.

b. Very Low Power (VLP) Wi-Fi 5.945-6.425 GHz devices (portable devices):

   The device is not permitted to be used on Unmanned Aircraft Systems (UAS) when operating in the 5945 to 6425 MHz frequency range in the European Union.

Wireless Radio Use

This device is restricted to indoor use when operating in the 2.4GHz, 5GHz, 6GHz frequency band.

Cet appareil doit être utilisé à l' intérieur.

당해 무선설비는 운용중 전파혼신 가능성이 있음.

この製品は、周波数帯域 2.4GHz, 5GHz, 6GHz で動作しているときは、屋内においてのみ使用可能です。

NCC無線設備警告聲明

工作頻率2.4GHz, 5GHz, 6GHz該頻段限於室內使用。

經型式認證合格之低功率射頻電機，非經許可，公司、商號或使用者均不得擅自變更頻率、加大功率或變更原設計之特性及功能。

低功率射頻電機之使用不得影響飛航安全及干擾合法通信；經發現有干擾現象時，應立即停用，並改善至無干擾時方得繼續使用。前項合法通信，指依電信法規定作業之無線電通信。低功率射頻電機須忍受合法通信或工業、科學及醫療用電波輻射性電機設備之干擾。

Compliance Statement of Innovation, Science and Economic Development Canada (ISED)

This device complies with with Innovation, Science and Economic Development Canada' s licence-exempt RSS(s). Operation is subject to the following two conditions:

(1) this device may not cause interference, and (2) this device must accept any interference, including interference that may cause undesired operation of the device.

Operation in the band 5150-5250 MHz is only for indoor use to reduce the potential for harmful interference to co-channel mobile satellite systems.

CAN ICES-003(B)/NMB-003(B)

Australia and New Zealand notice

This equipment incorporates a radio transmitting and receiving device. In normal use, a separation distance of 20 cm ensures that radio frequency exposure levels comply with the Australian and New Zealand Standards.

クラスB情報技術装置

この装置は、クラスB情報技術装置です。この装置は、家庭環境で使用することを目的としていますが、この装置がラジオやテレビジョン受信機に近接して使用されると、受信障害を引き起こすことがあります。取扱説明書に従って正しい取り扱いをして下さい。

VCCI-B

KC인증서

R-R-MSI-30-7E70

상호: (주)엠에스아이코리아
제품명: 메인보드
모델명: 30-7E70
제조년월: 2025년
제조자 및 제조국가: MSI/중국

Declaración de Cumplimiento para Chile (SUBTEL)

Para acceder a la Declaración de Conformidad y a la información de cumplimiento de Wi-Fi/Bluetooth según las regulaciones de SUBTEL, escanee el código QR o visite el siguiente enlace:
https://msi.gm/S11CB66B

Battery Information

European Union:



Batteries, battery packs, and accumulators should not be disposed of as unsorted household waste. Please use the public collection system to return, recycle, or treat them in compliance with the local regulations.

BSMI:



For better environmental protection, waste batteries should be collected separately for recycling or special disposal.

California, USA:



The button cell battery may contain perchlorate material and requires special handling when recycled or disposed of in California.
For further information please visit:
https://dtsc.ca.gov/perchlorate/

⚠WARNING

- **INGESTION HAZARD**: This product contains a button cell or coin battery.
- **DEATH** or serious injury can occur if ingested.
- A swallowed button cell or coin battery can cause **Internal Chemical Burns** in as little as **2 hours**.
- **KEEP** new and used batteries **OUT OF REACH OF CHILDREN**
- **Seek immediate medical attention** if a battery is suspected to be swallowed or inserted inside any part of the body.



- Remove and immediately recycle or dispose of used batteries according to local regulations and keep away from children. Do NOT dispose of batteries in household trash or incinerate.
- Even used batteries may cause severe injury or death. Call a local poison control center for treatment information.
- Battery type: CR2032
- Battery voltage: 3V
- Non-rechargeable batteries are not to be recharged.
- Do not force discharge, recharge, disassemble, heat above (manufacturer' s specified temperature rating) or incinerate. Doing so may result in injury due to venting, leakage or explosion resulting in chemical burns.
- This product contains an irreplaceable battery.
- This icon indicates that a swallowed button battery can cause serious injury or death. Please keep batteries out of sight or reach of children.

⚠ AVERTISSEMENT

- **RISQUE D' INGESTION**: ce produit contient une pile bouton.
- Si elle est ingérée, elle peut entraîner la **MORT** ou provoquer de graves blessures.
- Une pile bouton ingérée peut provoquer des **brûlures chimiques internes** en seulement **2 heures**.
- **GARDER** les piles neuves et usagées **HORS DE PORTÉE des ENFANTS**.
- **Demander une aide médicale immédiate** en cas de suspicion d' ingestion ou d' insertion d' une pile dans une partie quelconque du corps.



- Retirer les piles usagées et procéder immédiatement au recyclage ou à la mise au rebut conformément aux réglementations locales, et les tenir hors de portée des enfants. Ne PAS jeter les piles aux ordures ménagères ni les incinérer.
- Les piles même usagées peuvent provoquer des blessures graves, voire mortelles. Appeler un centre antipoison local pour obtenir des informations sur le traitement.
- Type de pile: CR2032
- Tension nominale de la batterie: 3V
- Les piles non rechargeables ne doivent pas être rechargées.
- Ne pas forcer la décharge, recharger, démonter, chauffer au-delà de (la température spécifiée par le fabricant) ou incinérer. Le non-respect de cette instruction pourrait entraîner des blessures dues à une fuite d' air ou de liquide ou à une explosion occasionnant des brûlures chimiques.
- Ce produit contient une batterie non remplaçable.
- Cet icône indique qu' une pile bouton avalée peut causer des blessures graves, voire mortelles. Veuillez conserver les piles hors de vue et de portée des enfants.

Chemical Substances Information

In compliance with chemical substances regulations, such as the EU REACH Regulation (Regulation EC No. 1907/2006 of the European Parliament and the Council), MSI provides the information of chemical substances in products at:

https://csr.msi.com/global/index

Environmental Policy

- The product has been designed to enable proper reuse of parts and recycling and should not be thrown away at its end of life.
- Users should contact the local authorized point of collection for recycling and disposing of their end-of-life products.
- Visit the MSI website <https://csr.msi.com/global/pevn_ewaste> and locate a nearby distributor for further recycling information.
- Please visit <https://us.msi.com/page/recycling> for information regarding the recycling of your product in the US.

WEEE (Waste Electrical and Electronic Equipment) Statement



European Union: This symbol on the product indicates that this product cannot be discarded as municipal waste. Instead, it is your responsibility to dispose of your waste electrical and electronic equipment by handing it over to a designated collection point for recycling. For more information about where you can drop off your waste equipment for recycling, please contact your local city office, your household waste disposal service or the shop where you purchased the product.

日本JIS C 0950材質宣言

日本工業規格JIS C 0950により、2006年7月1日以降に販売される特定分野の電気および電子機器について、製造者による含有物質の表示が義務付けられます。

https://csr.msi.com/tw/Japan-JIS-C-0950-Material-Declarations

India RoHS

This product complies with the “India E-waste (Management and Handling) Rule 2011” and prohibits use of lead, mercury, hexavalent chromium, polybrominated biphenyls or polybrominated diphenyl ethers in concentrations exceeding 0.1 weight % and 0.01 weight % for cadmium, except for the exemptions set in Schedule 2 of the Rule.

Türkiye EEE yönetmeliği

Türkiye Cumhuriyeti: EEE Yönetmeliğine Uygundur

Україна обмеження на наявність небезпечних речовин

Обладнання відповідає вимогам Технічного регламенту щодо обмеження використання деяких небезпечних речовин в електричному та електронному обладнані, затвердженого постановою Кабінету Міністрів України від 10 березня 2017 р. № 139

Việt Nam RoHS

Kể từ ngày 01/12/2012, tất cả các sản phẩm do công ty MSI sản xuất tuân thủ Thông tư số 30/2011/TT-BCT quy định tạm thời về giới hạn hàm lượng cho phép của một số hóa chất độc hại có trong các sản phẩm điện, điện tử"

Bangladesh RoHS Statement

This product shipping to Bangladesh comply with RoHS requirements as prescribed in the Hazardous Waste (E-waste) Management Rules, 2021 by Government of Bangladesh.

For more information, please refer:
https://csr.msi.com/global/bangladesh-rohs-statement

Bangladesh E-waste Management Reminder

Please manage, dismantle, dispose of, or recycle e-waste properly as per the Environmental Protection Rules, 1997 to avoid the harm that may be caused to the environment and ecosystem, public interest and public health.

Material Declaration under India' s Plastic Waste Management Rules:

INDOMSI COMPUTERS PRIVATE LIMITED

Regn. No.: IM-06-000-06-AAHCI0478A-25

Thickness $\geq$ 50 microns

MS-7E70主板产品中有害物质的名称及含有信息表

部件名称	有害物质									
	Pb	Hg	Cd	Cr(VI)	PBBs	PBDEs	DBP	DIBP	BBP	DEHP
电路板组件*	╳	○	○	○	○	○	○	○	○	○
外部信号连接头	╳	○	○	○	○	○	○	○	○	○
线材	╳	○	○	○	○	○	○	○	○	○

注1：○：表示该有害物质在该部件所有均质材料中的含量均不超出电器电子产品有害物质限制使用国家标准要求。

╳：表示该有害物质至少在该部件的某一均质材料中的含量超出电器电子产品有害物质限制使用国家标准要求。

注2：以上未列出的部件，表明其有害物質含量均不超出电器电子产品有害物质限制使用国家标准要求。

注3：上述表格标注“╳”之部件，皆符合达标管理目录限用物质应用例外清单之限值要求。

* 电路板组件：包括印刷电路板及其构成的零部件。

限用物質含有情況標示聲明書

設備名稱：電腦主機板	型號(型式)：MS-7E70					
單元	限用物質及其化學符號					
	鉛 (Pb)	汞 (Hg)	鎘 (Cd)	六價鉻 (Cr^{+6})	多溴聯苯 (PBB)	多溴二苯醚 (PBDE)
電路板	○	○	○	○	○	○
電子元件	—	○	○	○	○	○
金屬機構件	—	○	○	○	○	○
塑膠機構件	○	○	○	○	○	○

備考1. “超出0.1 wt %” 及 “超出0.01 wt %” 係指限用物質之百分比含量超出百分比含量基準值。

備考2. “○” 係指該項限用物質之百分比含量未超出百分比含量基準值。

備考3. “—” 係指該項限用物質為排除項目。

Copyright and Trademarks Notice

Copyright © Micro-Star Int' l Co., Ltd. All rights reserved. The MSI logo used is a registered trademark of Micro-Star Int' l Co., Ltd. All other marks and names mentioned may be trademarks of their respective owners. No warranty as to accuracy or completeness is expressed or implied. MSI reserves the right to make changes to this document without prior notice.

The terms HDMI™, HDMI™ High-Definition Multimedia Interface, HDMI™ Trade dress and the HDMI™ Logos are trademarks or registered trademarks of HDMI™ Licensing Administrator, Inc.

Technical Support

If a problem arises with your system and no solution can be obtained from the user guide, please contact your place of purchase or local distributor. Alternatively, please try the following help resources for further guidance.

- Visit the MSI website for technical guide, BIOS updates, driver updates, and other information: https://www.msi.com/support/
- Register your product at: http://register.msi.com

Revision History

- Version 3.0, 2025/10, First release.