Preface

Z97 GAMING 9 AC
Motherboard

G52-79261X1

Copyright Notice

The material in this document is the intellectual property of **MICRO-STAR INTERNATIONAL**. We take every care in the preparation of this document, but no guarantee is given as to the correctness of its contents. Our products are under continual improvement and we reserve the right to make changes without notice.

Trademarks

All trademarks in this manual are properties of their respective owners.

- MSI® is registered trademark of Micro-Star Int'l Co.,Ltd.
- NVIDIA® is registered trademark of NVIDIA Corporation.
- ATI® is registered trademark of AMD Corporation.
- AMD® is registered trademarks of AMD Corporation.
- Intel® is registered trademarks of Intel Corporation.
- Windows® is registered trademarks of Microsoft Corporation.
- AMI® is registered trademark of American Megatrends Inc.
- Award® is a registered trademark of Phoenix Technologies Ltd.
- Sound Blaster® is registered trademark of Creative Technology Ltd.
- Realtek® is registered trademark of Realtek Semiconductor Corporation.
- JMicron® is registered trademark of JMicron Technology Corporation.
- Netware® is registered trademark of Novell, Inc.
- Lucid® is trademark of LucidLogix Technologies, Ltd.
- VIA® is registered trademark of VIA Technologies, Inc.
- ASMedia® is registered trademark of ASMedia Technology Inc.
- iPad, iPhone, and iPod are trademarks of Apple Inc.
- Qualcomm Atheros and Killer are trademarks of Qualcomm Atheros Inc.

Revision History

Revision	Revision History	Date
V1.0	First release	2014/ 03

Smartphone Application

MSI+ is a smart web gadget that works as a shopping navigator and provides specs comparison for IT buyers. With a simple tap of the smartphone, you'll efficiently locate your ideal products from a wide variety of choices and, if product details are required, you may easily download user manuals within minutes. Better yet, the power calculator provides accurate estimates of power unit capacity for DIY users.

ANDROID APP ON Google play

Available on the iPhone App Store

Technical Support

If a problem arises with your system and no solution can be obtained from the user's manual, please contact your place of purchase or local distributor. Alternatively, please try the following help resources for further guidance.

Visit the MSI website for technical guide, BIOS updates, driver updates, and other information:
http://www.msi.com/service/download/

Contact our technical staff at:
http://register.msi.com/

Safety Instructions

- Always read the safety instructions carefully.
- Keep this User's Manual for future reference.
- Keep this equipment away from humidity.
- Lay this equipment on a reliable flat surface before setting it up.
- The openings on the enclosure are for air convection hence protects the equipment from overheating. DO NOT COVER THE OPENINGS.
- Make sure the voltage of the power source is at 110/220V before connecting the equipment to the power inlet.
- Place the power cord such a way that people can not step on it. Do not place anything over the power cord.
- Always Unplug the Power Cord before inserting any add-on card or module.
- All cautions and warnings on the equipment should be noted.
- Never pour any liquid into the opening that can cause damage or cause electrical shock.
- If any of the following situations arises, get the equipment checked by service personnel:
  - The power cord or plug is damaged.
  - Liquid has penetrated into the equipment.
  - The equipment has been exposed to moisture.
  - The equipment does not work well or you can not get it work according to User's Manual.
  - The equipment has been dropped and damaged.
  - The equipment has obvious sign of breakage.
- DO NOT LEAVE THIS EQUIPMENT IN AN ENVIRONMENT ABOVE 60°C (140°F), IT MAY DAMAGE THE EQUIPMENT.

FCC-B Radio Frequency Interference Statement

This equipment has been tested and found to comply with the limits for a Class B digital device, pursuant to Part 15 of the FCC Rules. These limits are designed to provide reasonable protection against harmful interference in a residential installation. This equipment generates, uses and can radiate radio frequency energy and, if not installed and used in accordance with the instructions, may cause harmful interference to radio communications. However, there is no guarantee that interference will not occur in a particular installation. If this equipment does cause harmful interference to radio or television reception, which can be determined by turning the equipment off and on, the user is encouraged to try to correct the interference by one or more of the measures listed below.

- Reorient or relocate the receiving antenna.
- Increase the separation between the equipment and receiver.
- Connect the equipment into an outlet on a circuit different from that to which the receiver is connected.
- Consult the dealer or an experienced radio/television technician for help.

Notice 1

The changes or modifications not expressly approved by the party responsible for compliance could void the user's authority to operate the equipment.

Notice 2

Shielded interface cables and A.C. power cord, if any, must be used in order to comply with the emission limits.

VOIR LA NOTICE D'INSTALLATION AVANT DE RACCORDER AU RESEAU.

FC Micro-Star International
MS-7926

This device complies with Part 15 of the FCC Rules. Operation is subject to the following two conditions:

1) this device may not cause harmful interference, and
2) this device must accept any interference received, including interference that may cause undesired operation.

CE Conformity

Hereby, Micro-Star International CO., LTD declares that this device is in compliance with the essential safety requirements and other relevant provisions set out in the European Directive.

CE

N1996

Radiation Exposure Statement

This equipment complies with FCC radiation exposure limits set forth for an uncontrolled environment. This equipment and its antenna should be installed and operated with minimum distance 20 cm between the radiator and your body. This equipment and its antenna must not be co-located or operating in conjunction with any other antenna or transmitter.

European Community Compliance Statement

The equipment complies with the RF Exposure Requirement 1999/519/EC, Council Recommendation of 12 July 1999 on the limitation of exposure of the general public to electromagnetic fields (0–300GHz). This wireless device complies with the R&TTE Directive.

FCC Bluetooth Wireless Compliance

The antenna used with this transmitter must not be colocated or operated in conjunction with any other antenna or transmitter subject to the conditions of the FCC Grant.

Bluetooth Industry Canada Statement

This Class B device meets all requirements of the Canadian interference-causing equipment regulations.

Cet appareil numérique de la Class B respecte toutes les exigences du Règlement sur le matériel brouilleur du Canada.

Taiwan Wireless Statements

無線設備警告聲明

經型式認證合格之低功率射頻電機，非經許可，公司、商號或使用者均不得擅自變更頻率、加大功率或變更原設計之特性及功能。

低功率射頻電機之使用不得影響飛航安全及干擾合法通信；經發現有干擾現象時，應立即停用，並改善至無干擾時方得繼續使用。前項合法通信，指依電信法規定作業之無線電通信。低功率射頻電機須忍受合法通信或工業、科學及醫療用電波輻射性電機設備之干擾。

工作頻率2.412GHz~2.462GHz, , 5GHz該頻段限於室內使用。

警告使用者:這是甲類資訊產品，在居住的環境中使用時，可能會造成無線電干擾，在這種情況下，使用者會被要求採取某些適當的對策。

Japan VCCI Class B Statement

クラス B 情報技術装置

この装置は、情報技術装置等電波障害自主規制協議会（VCCI）の基準に基づくクラスB情報技術装置です。この装置が家庭内でラジオやテレビジョン受信機に近接して使われると、受信障害を引き起こすことがあります。取扱説明書にしたがって正しい取り扱いをしてください。

この製品は、周波数帯域 2.412GHz~2.484GHz, , 5GHzで動作しているときは、屋内においてのみ使用可能です。

Korea Warning Statements

당해 무선설비는 운용중 전파혼신 가능성이 있음

Battery Information



European Union:

Batteries, battery packs, and accumulators should not be disposed of as unsorted household waste. Please use the public collection system to return, recycle, or treat them in compliance with the local regulations.



廢電池請回收

Taiwan:

For better environmental protection, waste batteries should be collected separately for recycling or special disposal.



California, USA:

The button cell battery may contain perchlorate material and requires special handling when recycled or disposed of in California.

For further information please visit:

http://www.dtsc.ca.gov/hazardouswaste/perchlorate/

CAUTION: There is a risk of explosion, if battery is incorrectly replaced.

Replace only with the same or equivalent type recommended by the manufacturer.

Chemical Substances Information

In compliance with chemical substances regulations, such as the EU REACH Regulation (Regulation EC No. 1907/2006 of the European Parliament and the Council), MSI provides the information of chemical substances in products at:

http://www.msi.com/html/popup/csr/evmtprtt_pcm.html

WEEE (Waste Electrical and Electronic Equipment) Statement

ENGLISH



To protect the global environment and as an environmentalist, MSI must remind you that...

Under the European Union ("EU") Directive on Waste Electrical and Electronic Equipment, Directive 2002/96/EC, which takes effect on August 13, 2005, products of "electrical and electronic equipment" cannot be discarded as municipal wastes anymore, and manufacturers of covered electronic equipment will be obligated to take back such products at the end of their useful life. MSI will comply with the product take back requirements at the end of life of MSI-branded products that are sold into the EU. You can return these products to local collection points.

DEUTSCH

Hinweis von MSI zur Erhaltung und Schutz unserer Umwelt

Gemäß der Richtlinie 2002/96/EG über Elektro- und Elektronik-Altgeräte dürfen Elektro- und Elektronik-Altgeräte nicht mehr als kommunale Abfälle entsorgt werden. MSI hat europaweit verschiedene Sammel- und Recyclingunternehmen beauftragt, die in die Europäische Union in Verkehr gebrachten Produkte, am Ende seines Lebenszyklus zurückzunehmen. Bitte entsorgen Sie dieses Produkt zum gegebenen Zeitpunkt ausschliesslich an einer lokalen Altgerätesammelstelle in Ihrer Nähe.

FRANÇAIS

En tant qu'écologiste et afin de protéger l'environnement, MSI tient à rappeler ceci...

Au sujet de la directive européenne (EU) relative aux déchets des équipement électriques et électroniques, directive 2002/96/EC, prenant effet le 13 août 2005, que les produits électriques et électroniques ne peuvent être déposés dans les décharges ou tout simplement mis à la poubelle. Les fabricants de ces équipements seront obligés de récupérer certains produits en fin de vie. MSI prendra en compte cette exigence relative au retour des produits en fin de vie au sein de la communauté européenne. Par conséquent vous pouvez retourner localement ces matériels dans les points de collecte.

РУССКИЙ

Компания MSI предпринимает активные действия по защите окружающей среды, поэтому напоминаем вам, что....

В соответствии с директивой Европейского Союза (ЕС) по предотвращению загрязнения окружающей среды использованным электрическим и электронным оборудованием (директива WEEE 2002/96/EC), вступающей в силу 13 августа 2005 года, изделия, относящиеся к электрическому и электронному оборудованию, не могут рассматриваться как бытовой мусор, поэтому производители вышеперечисленного электронного оборудования обязаны принимать его для переработки по окончании срока службы. MSI обязуется соблюдать требования по приему продукции, проданной под маркой MSI на территории ЕС, в переработку по окончании срока службы. Вы можете вернуть эти изделия в специализированные пункты приема.

ESPAÑOL

MSI como empresa comprometida con la protección del medio ambiente, recomienda:

Bajo la directiva 2002/96/EC de la Unión Europea en materia de desechos y/o equipos electrónicos, con fecha de rigor desde el 13 de agosto de 2005, los productos clasificados como “eléctricos y equipos electrónicos” no pueden ser depositados en los contenedores habituales de su municipio, los fabricantes de equipos electrónicos, están obligados a hacerse cargo de dichos productos al termino de su período de vida. MSI estará comprometido con los términos de recogida de sus productos vendidos en la Unión Europea al final de su periodo de vida. Usted debe depositar estos productos en el punto limpio establecido por el ayuntamiento de su localidad o entregar a una empresa autorizada para la recogida de estos residuos.

NEDERLANDS

Om het milieu te beschermen, wil MSI u eraan herinneren dat….

De richtlijn van de Europese Unie (EU) met betrekking tot Vervuiling van Electrische en Electronische producten (2002/96/EC), die op 13 Augustus 2005 in zal gaan kunnen niet meer beschouwd worden als vervuiling. Fabrikanten van dit soort producten worden verplicht om producten retour te nemen aan het eind van hun levenscyclus. MSI zal overeenkomstig de richtlijn handelen voor de producten die de merknaam MSI dragen en verkocht zijn in de EU. Deze goederen kunnen geretourneerd worden op lokale inzamelingspunten.

SRPSKI

Da bi zaštitili prirodnu sredinu, i kao preduzeće koje vodi računa o okolini i prirodnoj sredini, MSI mora da vas podesti da…

Po Direktivi Evropske unije (“EU”) o odbačenoj ekektronskoj i električnoj opremi, Direktiva 2002/96/EC, koja stupa na snagu od 13. Avgusta 2005, proizvodi koji spadaju pod “elektronsku i električnu opremu” ne mogu više biti odbačeni kao običan otpad i proizvođači ove opreme biće prinuđeni da uzmu natrag ove proizvode na kraju njihovog uobičajenog veka trajanja. MSI će poštovati zahtev o preuzimanju ovakvih proizvoda kojima je istekao vek trajanja, koji imaju MSI oznaku i koji su prodati u EU. Ove proizvode možete vratiti na lokalnim mestima za prikupljanje.

POLSKI

Aby chronić nasze środowisko naturalne oraz jako firma dbająca o ekologię, MSI przypomina, że...

Zgodnie z Dyrektywą Unii Europejskiej (“UE”) dotyczącą odpadów produktów elektrycznych i elektronicznych (Dyrektywa 2002/96/EC), która wchodzi w życie 13 sierpnia 2005, tzw. “produkty oraz wyposażenie elektryczne i elektroniczne “ nie mogą być traktowane jako śmieci komunalne, tak więc producenci tych produktów będą zobowiązani do odbierania ich w momencie gdy produkt jest wycofywany z użycia. MSI wypełni wymagania UE, przyjmując produkty (sprzedawane na terenie Unii Europejskiej) wycofywane z użycia. Produkty MSI będzie można zwracać w wyznaczonych punktach zbiorczych.

TÜRKÇE

Çevreci özelliğiyle bilinen MSI dünyada çevreyi korumak için hatırlatır:

Avrupa Birliği (AB) Kararnamesi Elektrik ve Elektronik Malzeme Atığı, 2002/96/EC Kararnamesi altında 13 Ağustos 2005 tarihinden itibaren geçerli olmak üzere, elektrikli ve elektronik malzemeler diğer atıklar gibi çöpe atılamayacak ve bu elektonik cihazların üreticileri, cihazların kullanım süreleri bittikten sonra ürünleri geri toplamakla yükümlü olacaktır. Avrupa Birliği'ne satılan MSI markalı ürünlerin kullanım süreleri bittiğinde MSI ürünlerin geri alınması isteği ile işbirliği içerisinde olacaktır. Ürünlerinizi yerel toplama noktalarına bırakabilirsiniz.

ČESKY

Záleží nám na ochraně životního prostředí - společnost MSI upozorňuje...

Podle směrnice Evropské unie ("EU") o likvidaci elektrických a elektronických výrobků 2002/96/EC platné od 13. srpna 2005 je zakázáno likvidovat "elektrické a elektronické výrobky" v běžném komunálním odpadu a výrobci elektronických výrobků, na které se tato směrnice vztahuje, budou povinni odebírat takové výrobky zpět po skončení jejich životnosti. Společnost MSI splní požadavky na odebírání výrobků značky MSI, prodávaných v zemích EU, po skončení jejich životnosti. Tyto výrobky můžete odevzdat v místních sběrnách.

MAGYAR

Annak érdekében, hogy környezetünket megvédjük, illetve környezetvédőként fellépve az MSI emlékezteti Önt, hogy ...

Az Európai Unió („EU") 2005. augusztus 13-án hatályba lépő, az elektromos és elektronikus berendezések hulladékairól szóló 2002/96/EK irányelve szerint az elektromos és elektronikus berendezések többé nem kezelhetőek lakossági hulladékként, és az ilyen elektronikus berendezések gyártói kötelessé válnak az ilyen termékek visszavételére azok hasznos élettartama végén. Az MSI betartja a termékvisszavétellel kapcsolatos követelményeket az MSI márkanév alatt az EU-n belül értékesített termékek esetében, azok élettartamának végén. Az ilyen termékeket a legközelebbi gyűjtőhelyre viheti.

ITALIANO

Per proteggere l'ambiente, MSI, da sempre amica della natura, ti ricorda che….

In base alla Direttiva dell'Unione Europea (EU) sullo Smaltimento dei Materiali Elettrici ed Elettronici, Direttiva 2002/96/EC in vigore dal 13 Agosto 2005, prodotti appartenenti alla categoria dei Materiali Elettrici ed Elettronici non possono più essere eliminati come rifiuti municipali: i produttori di detti materiali saranno obbligati a ritirare ogni prodotto alla fine del suo ciclo di vita. MSI si adeguerà a tale Direttiva ritirando tutti i prodotti marchiati MSI che sono stati venduti all'interno dell'Unione Europea alla fine del loro ciclo di vita. È possibile portare i prodotti nel più vicino punto di raccolta

CONTENTS

Preface i
Copyright Notice ii
Trademarks ii
Revision History ii
Smartphone Application iii
Technical Support iii
Safety Instructions iv
FCC-B Radio Frequency Interference Statement v
CE Conformity v
Radiation Exposure Statement vi
European Community Compliance Statement vi
FCC Bluetooth Wireless Compliance vi
Bluetooth Industry Canada Statement vi
Taiwan Wireless Statements vi
Japan VCCI Class B Statement vi
Korea Warning Statements vi
Battery Information vii
Chemical Substances Information vii
WEEE (Waste Electrical and Electronic Equipment) Statement viii
Chapter 1 Getting Started 1-1
Packing Contents 1-2
Optional Accessories 1-2
Assembly Precautions 1-3
Motherboard Specifications 1-4
Connectors Quick Guide 1-7
Back Panel Quick Guide 1-9
CPU (Central Processing Unit) 1-11
Introduction to the LGA 1150 CPU 1-11
CPU & Heatsink Installation 1-12
Memory 1-15
Dual-Channel mode Population Rule 1-15
Mounting Screw Holes 1-16
Power Supply 1-17
JPWR1~2: ATX Power Connectors 1-17
Expansion Slots 1-18
PCI_E1~6: PCIe Expansion Slots 1-18

Video/ Graphics Cards 1-19
Single Video Card Installation 1-19
Internal Connectors 1-20
SATA1~8: SATA Connectors 1-20
CPUFAN1~2,SYSFAN1~3: Fan Power Connectors 1-21
JFP1, JFP2: System Panel Connectors 1-22
JUSB1~2: USB 2.0 Expansion Connectors 1-23
JUSB3~4: USB 3.0 Expansion Connectors 1-24
JCI1: Chassis Intrusion Connector 1-24
JAUD1: Front Panel Audio Connector 1-25
AUDPWR1: Direct Audio Power Connector 1-25
M2_1: M.2 Port 1-26
JTPM1: TPM Module Connector 1-26
Voltage Checkpoints 1-27
FV1: V-Check Connectors 1-27
Buttons 1-28
OC1: OC Genie Button 1-28
POWER1: Power Button 1-29
RESET1: Reset Button 1-29
Jumper 1-30
JBAT1: Clear CMOS Jumper 1-30
Switch 1-31
BIOS_SW1: Multi-BIOS Switch 1-31
SLOW_1: Slow Mode Booting Switch 1-32
AUD_SW1: Audio Power Switch 1-32
LED Status Indicators 1-33
LED Status Table 1-33
Debug Code LED Table 1-34
Drivers and Utilities 1-35
Driver/ Utilities Installation 1-35
Chapter 2 Quick Installation 2-1
CPU Installation 2-2
Memory Installation 2-4
Motherboard Installation 2-5
Power Connectors Installation 2-7
SATA HDD Installation 2-9
M.2 module Installation 2-10
Front Panel Connector Installation 2-11
JFP1 Connector Installation 2-11

Front Panel Audio Connector Installation 2-11
Peripheral Connector Installation 2-12
USB2.0 Connector Installation 2-12
USB3.0 Connector Installation 2-12
Graphics Card Installation 2-13
Chapter 3 BIOS Setup 3-1
Entering Setup 3-2
Entering BIOS Setup 3-2
Overview 3-3
Operation 3-6
Updating BIOS 3-7
Updating the BIOS with M-FLASH 3-7
SETTINGS 3-8
System Status 3-8
Advanced 3-9
Boot 3-15
Security 3-16
Save & Exit 3-16
OC 3-17
M-FLASH 3-26
OC PROFILE 3-27
HARDWARE MONITOR 3-28
Appendix A Realtek Audio A-1
Software Configuration A-2
Software panel overview A-2
Auto popup dialog A-3
Hardware Default Setting A-4
Appendix B Intel RAID B-1
Introduction B-2
Using Intel Rapid Storage Technology Option ROM B-3
Degraded RAID Array B-10
System Acceleration (optional) B-12
RST Synchronization (optional) B-14

Chapter 1

Getting Started

Thank you for choosing the Z97 GAMING 9 AC Series (MS-7926 v1.X) ATX motherboard. The Z97 GAMING 9 AC Series motherboards are based on Intel® Z97 chipset for optimal system efficiency. Designed to fit the advanced Intel® LGA1150 processor, the Z97 GAMING 9 AC Series motherboards deliver a high performance and professional desktop platform solution.

Packing Contents

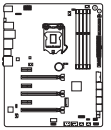
Motherboard


Drivers & Utilities Disc



Motherboard User Guide


I/O Shield

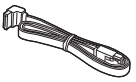
SATA Cable


Network Driver & Utilities Disc



Software & Application User Guide

Optional Accessories

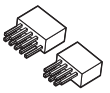
M-Connector

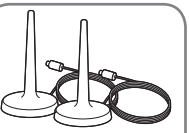
Antenna x2

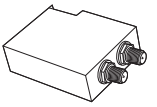
Wi-Fi/Bluetooth module


SLI Cable

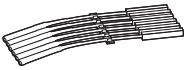
V-Check Cable x6


Audio Power Adapter

* These pictures are for reference only and may vary without notice.

* The packing contents may vary according to the model you purchased.

* If you need to purchase the optional accessories or request part numbers, please visit the MSI website at http://www.msi.com/index.php or consult the dealer.

Assembly Precautions

- The components included in this package are prone to damage from electrostatic discharge (ESD). Please adhere to the following instructions to ensure successful computer assembly.
- Always turn off the power supply and unplug the power cord from the power outlet before installing or removing any computer component.
- Ensure that all components are securely connected. Loose connections may cause the computer to not recognize a component or fail to start.
- Hold the motherboard by the edges to avoid touching sensitive components.
- It is recommended to wear an electrostatic discharge (ESD) wrist strap when handling the motherboard to prevent electrostatic damage. If an ESD wrist strap is not available, discharge yourself of static electricity by touching another metal object before handling the motherboard.
- Store the motherboard in an electrostatic shielding container or on an antistatic pad whenever the motherboard is not installed.
- Before turning on the computer, ensure that there are no loose screws or metal components on the motherboard or anywhere within the computer case.
- Do not use the computer in a high-temperature environment.
- Do not boot the computer before installation is completed. This could cause permanent damage to the components as well as injury to the user.
- If you need help during any installation step, please consult a certified computer technician.



A screwdriver (not included) may be required for computer assembly.

Motherboard Specifications

CPU Support	■ Supports 4th and 5th Generation Intel® Core™ Processors, and Intel® Pentium® and Celeron® Processors for Socket LGA1150
Chipset	■ Intel® Z97 Express Chipset
Memory Support	■ 4x DDR3 memory slots supporting up to 32GB ■ Supports DDR3 3200(OC)/ 3100(OC)/ 3000(OC)/ 2800(OC)/ 2666(OC)/ 2600(OC)/ 2400(OC)/ 2200(OC)/ 2133(OC)/ 2000(OC)/ 1866(OC)/ 1600/ 1333/ 1066 MHz ■ Dual channel memory architecture ■ Supports non-ECC, un-buffered memory ■ Supports Intel® Extreme Memory Profile (XMP)
Expansion Slots	■ 3x PCIe 3.0 x16 slots (support x16, x8/x8, x8/x4/x4 modes) ■ 3x PCIe 2.0 x1 slots
Onboard Graphics	■ 1x HDMI port, supporting a maximum resolution of 4096x2160@24 Hz/ 2560x1600@60 Hz ■ 1x DisplayPort, supporting a maximum resolution of 4096x2304@24Hz/ 2560x1600@60Hz/ 3840x2160@60Hz/ 1920x1200@60Hz
Multi-GPU Support	■ Supports 3-Way AMD® CrossFire™ Technology* ■ Supports 2-Way NVIDIA® SLI™ Technology *** Supports Windows 7 and Windows 8/ 8.1.**
Storage	■ Intel® Z97 Express Chipset - 6x SATA 6Gb/s ports (SATA1~6) - 1x M.2 port* - M.2 port supports M.2 SATA 6Gb/s module - M.2 port supports M.2 PCIe module up to 10Gb/s speed** - M.2 port supports 4.2cm/ 6cm/ 8cm length module - Supports RAID 0, RAID1, RAID 5 and RAID 10*** - Supports Intel® Smart Response Technology, Intel® Rapid Start - Technology and Intel® Smart Connect Technology**** ■ ASMedia ASM1061 Chipset - 2x SATA 6Gb/s ports (SATA7~8) *** The SATA5 and SATA6 ports will be unavailable when installing a module in the M.2 port.** **** Intel RST only supports PCIe M.2 SSD with UEFI ROM, does not support Legacy ROM.** ***** M.2 PCIe interface does not support RAID 0, RAID1, RAID 5 and RAID 10.** ****** Supports Intel Core processors on Windows 7 and Windows 8/ 8.1**
USB	■ Intel® Z97 Express Chipset - 4x USB 3.0 ports available through the internal USB connectors - 6x USB 2.0 ports (2 ports on the back panel, 4 ports available through the internal USB connectors*) ■ ASMedia ASM1074 Chipset - 6x USB 3.0 ports on the back panel ■ ASMedia ASM1042 Chipset - 2x USB 3.0 ports on the back panel *** Internal JUSB1 connector supports MSI Super Charger.**
Audio	■ Realtek® ALC1150 Codec - 7.1-Channel High Definition Audio - Supports S/PDIF output ■ CMedia CM6631A (for JAUD1) - USB 2.0 High speed audio

LAN	■ 1x Killer E2205 Gigabit LAN controller* *** The Killer Network Manager is only available for Windows 7 and Windows 8/ 8.1 currently. The supported drivers for other operating systems would be available on the website if provided by vendor.**
Wireless LAN	■ Wi-Fi/Bluetooth expansion module with Intel Dual Band Wireless-AC 7260 chip. - Supports Wi-Fi 802.11 a/b/g/n/ac, dual band (2.4GHz, 5GHz) up to 867 Mbps speed. - Supports Intel Wireless Display (WiDi)
Bluetooth	■ Wi-Fi/Bluetooth expansion module with Intel Dual Band Wireless-AC 7260 chip. - Supports Bluetooth v4.0 (includes BLE* and Bluetooth 3.0+HS) *** BLE: Bluetooth Low Energy**
Back Panel Connectors	■ 1x PS/2 keyboard/ mouse combo port ■ 2x USB 2.0 ports ■ 1x Clear CMOS button ■ 8x USB 3.0 ports ■ 1x LAN (RJ45) port ■ 1x Optical S/PDIF OUT connector ■ 1x HDMI ports ■ 1x DisplayPort ■ 6x OFC audio jacks
Internal Connectors	■ 1x 24-pin ATX main power connector ■ 1x 8-pin ATX 12V power connector ■ 8x SATA 6Gb/s connectors ■ 1x M.2 port ■ 2x USB 2.0 connectors (supports additional 4 USB 2.0 ports) ■ 2x USB 3.0 connectors (supports additional 4 USB 3.0 ports) ■ 2x 4-pin CPU fan connectors ■ 3x 4-pin system fan connectors ■ 1x TPM module connector ■ 1x Front panel audio connector ■ 1x Direct audio power connector ■ 2x System panel connectors ■ 1x Chassis Intrusion connector ■ 1x Clear CMOS jumper ■ 9x V-Check connectors ■ 1x Power button ■ 1x Reset button ■ 1x OC Genie button ■ 1x Multi-BIOS switch ■ 1x Slow mode booting switch ■ 1x Audio power switch ■ 1x Wi-Fi/Bluetooth module connector ■ 1x 2-Digit Debug Code LED
I/O Controller	■ NUVOTON NCT6792 Controller Chip
Hardware Monitor	■ CPU/System temperature detection ■ CPU/System fan speed detection ■ CPU/System fan speed control

BIOS Features	■ 2x 64 Mb flash ■ UEFI AMI BIOS ■ ACPI 5.0, PnP 1.0a, SM BIOS 2.7, DMI 2.0 ■ Multi-language
Special Features	■ Audio Boost ■ Military Class 4 ■ OC Genie 4 ■ Click BIOS 4 ■ Intel Wireless Display ■ NVIDIA SLI ■ AMD CrossFire ■ Sound Blaster Cinema 2 ■ Easy Button ■ V-Check Points ■ Clear CMOS Button ■ Total Fan Control ■ Gaming Device Port ■ Super Charger ■ Smart Utilities ■ Wi-Fi ■ Bluetooth ■ Command Center ■ ECO Center
Software	■ Drivers ■ MSI - Command Center - Live Update 6 - Smart Utilities - Super Charger - Fast Boot - ECO Center - Gaming APP ■ 7-ZIP ■ Intel Extreme Tuning Utility ■ Norton Internet Security Solution ■ Sound Blaster Cinema 2 ■ XSplit Gamecaster ■ Killer Network Manager
Form Factor	■ ATX Form Factor ■ 12 in. x 9.6 in. (30.5 cm x 24.4 cm)

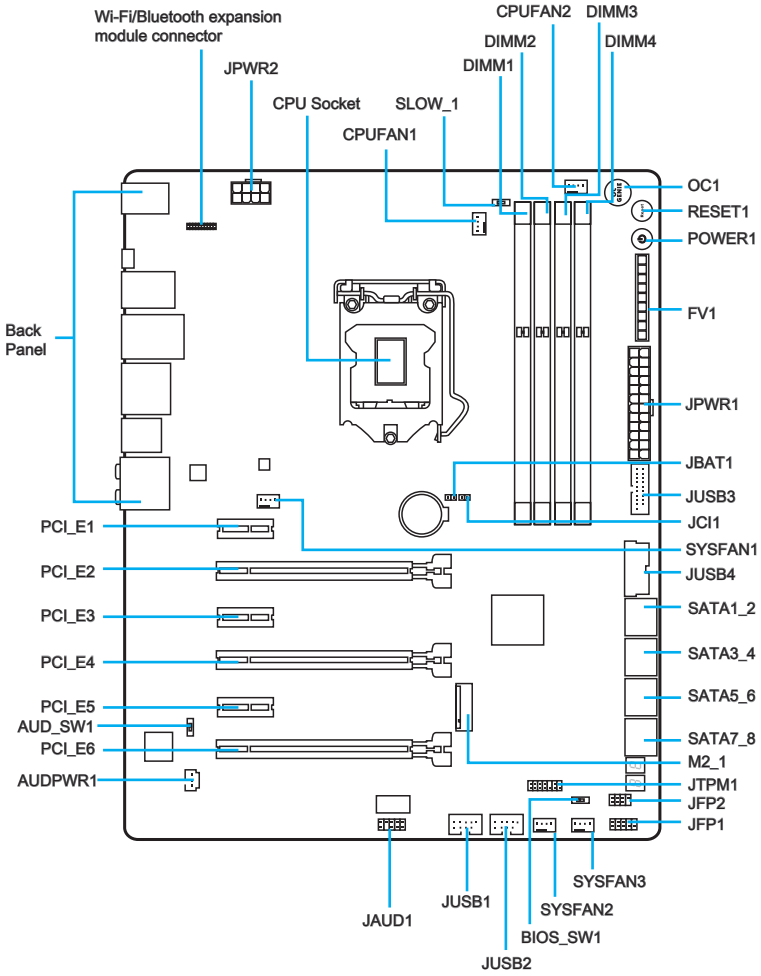

For the latest information about CPU, please visit
http://www.msi.com/cpu-support/

For more information on compatible components, please visit
http://www.msi.com/test-report/

Connectors Reference Guide

Port Name	Port Type	Page
Back Panel	I/O Ports	1-9
AUD_SW1	Audio Power Switch	1-32
AUDPWR1	Direct Audio Power Connector	1-25
BIOS_SW1	Multi-BIOS Switch	1-31
CPU Socket	LGA1150 CPU Socket	1-11
CPUFAN1~2,SYSFAN1~3	Fan Power Connectors	1-21
DIMM1~4	DDR3 Memory slots	1-15
FV1	V-Check Connectors	1-27
JAUD1	Front Panel Audio Connector	1-25
JBAT1	Clear CMOS Jumper	1-30
JCI1	Chassis Intrusion Connector	1-24
JFP1, JFP2	System Panel Connectors	1-22
JPWR1~2	ATX Power Connectors	1-17
JTPM1	TPM Module Connector	1-26
JUSB1~2	USB 2.0 Expansion Connectors	1-23
JUSB3~4	USB 3.0 Expansion Connectors	1-24
M2_1	M.2 Port	1-26
OC1	OC Genie Button	1-28
PCI_E1~6	PCIe Expansion Slots	1-18
POWER1	Power Button	1-29
RESET1	Reset Button	1-29
SATA1~8	SATA Connectors	1-20
SLOW_1	Slow Mode Booting Switch	1-32

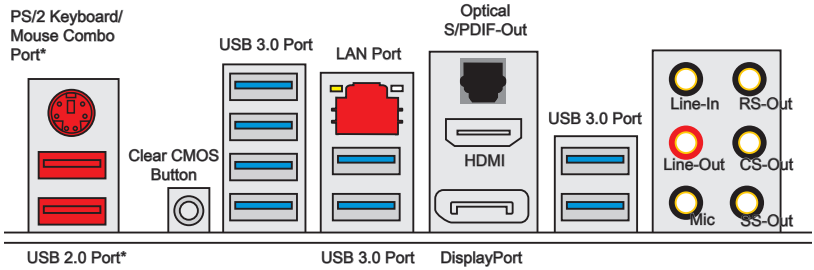

* Gaming Device Port.

▸PS/2 Keyboard/Mouse Combo Port

A combination of PS/2® mouse/keyboard DIN connector for a PS/2® mouse/keyboard.

▸Clear CMOS Button

There is CMOS RAM present on board that is powered by an external battery to store system configuration data. Using CMOS RAM, the system can automatically boot into the operating system (OS) every time it is turned on. If you wish to clear the system configuration, press the button to clear the data.

▸USB 2.0 Port

The USB 2.0 port is for attaching USB 2.0 devices such as keyboard, mouse, or other USB 2.0-compatible devices.

▸USB 3.0 Port

USB 3.0 port is backward-compatible with USB 2.0 devices. It supports data transfer rate up to 5 Gbit/s (SuperSpeed).

Important

In order to use USB 3.0 devices, you must connect to a USB 3.0 port. If a USB cable is used, it must be USB 3.0 compliant.

▸LAN Port

The standard RJ-45 LAN jack is for connecting to a Local Area Network (LAN).

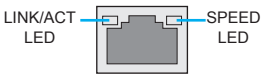

LED	LED Status	Description
Link/ Activity LED	Off	No link
	Yellow	Linked
	Blinking	Data activity
Speed LED	Off	10 Mbps connection
	Green	100 Mbps connection
	Orange	1 Gbps connection

▸Optical S/PDIF-Out

This S/PDIF (Sony & Philips Digital Interconnect Format) connector is provided for digital audio transmission to external speakers through an optical fiber cable.

▸HDMI Port

The High-Definition Multimedia Interface (HDMI) is an all-digital audio-video interface that is capable of transmitting uncompressed streams. HDMI supports all types of TV formats, including standard, enhanced, or high-definition video, plus multi-channel digital audio on a single cable.

▸DisplayPort

DisplayPort is a digital display interface standard. This connector is used to connect a monitor with DisplayPort inputs.

Important

This platform supports dual-display function.

	HDMI+DisplayPort
Extend mode (Extend the desktop to the second and third monitor)	○
Clone mode (Monitors have the same screen)	○

▸Audio Ports

These connectors are used for audio devices. The color of the jack refers to the function of the connector.

- Line in: Used for connecting external audio outputting devices.
- Line out: Used as a connector for speakers or headphone.
- Mic: Used as a connector for a microphone.
- RS-Out: Rear surround sound line out in 4/ 5.1/ 7.1 channel mode.
- CS-Out: Center/ subwoofer line out in 5.1/ 7.1 channel mode.
- SS-Out: Side surround sound line out in 7.1 channel mode.

Introduction to the LGA 1150 CPU

The surface of the LGA 1150 CPU has two notches and a golden triangle to assist in correctly lining up the CPU for motherboard placement. The golden triangle is the Pin 1 indicator.

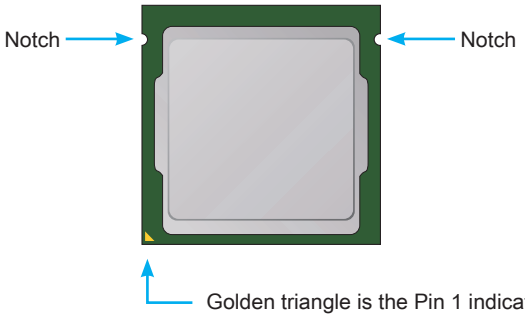

Important

Overheating

Overheating can seriously damage the CPU and motherboard. Always make sure the cooling fans work properly to protect the CPU from overheating. Be sure to apply an even layer of thermal paste (or thermal tape) between the CPU and the heatsink to enhance heat dissipation.

Replacing the CPU

When replacing the CPU, always turn off the system's power supply and unplug the power supply's power cord to ensure the safety of the CPU.

Overclocking

This motherboard is designed to support overclocking. Before attempting to overclock, please make sure that all other system components can tolerate overclocking. Any attempt to operate beyond product specifications is not recommend. MSI does not guarantee the damages or risks caused by inadequate operation beyond product specifications.

CPU & Heatsink Installation

When installing a CPU, always remember to install a CPU heatsink. A CPU heatsink is necessary to prevent overheating and maintain system stability. Follow the steps below to ensure correct CPU and heatsink installation. Wrong installation can damage both the CPU and the motherboard.

Video Demonstration

Watch the video to learn how to install CPU & heatsink.
http://youtu.be/bf5La099url

1. Push the load lever down to unclip it and lift to the fully open position.
2. The load plate will automatically lift up as the load lever is pushed to the fully open position.

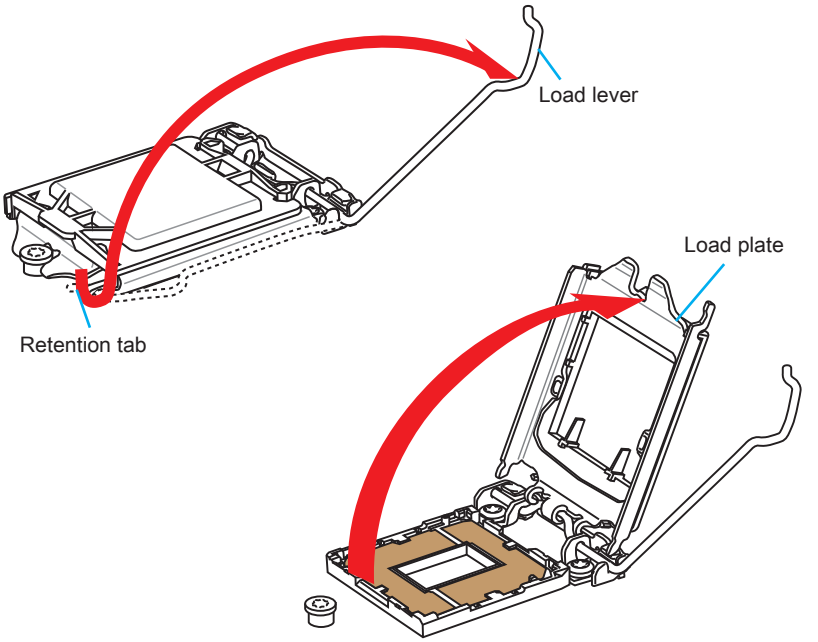

Important

Do not touch the socket contacts or the bottom of the CPU.

3. Align the notches with the socket alignment keys. Lower the CPU straight down, without tilting or sliding the CPU in the socket. Inspect the CPU to check if it is properly seated in the socket.
4. Close and slide the load plate under the retention knob. Close and engage the load lever.

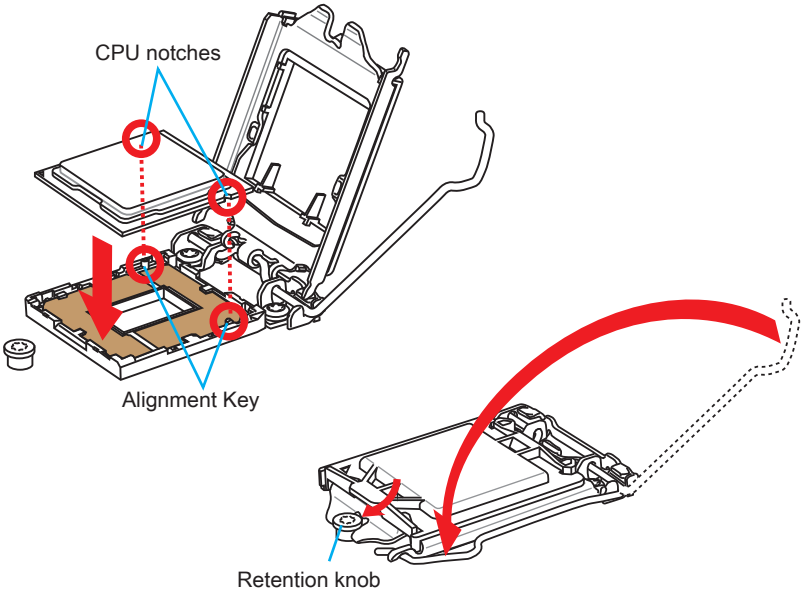

5. When you press down the load lever the PnP cap will automatically pop up from the CPU socket. Do not discard the PnP cap. Always replace the PnP cap if the CPU is removed from the socket.
6. Evenly spread a thin layer of thermal paste (or thermal tape) on the top of the CPU. This will help in heat dissipation and prevent CPU overheating.

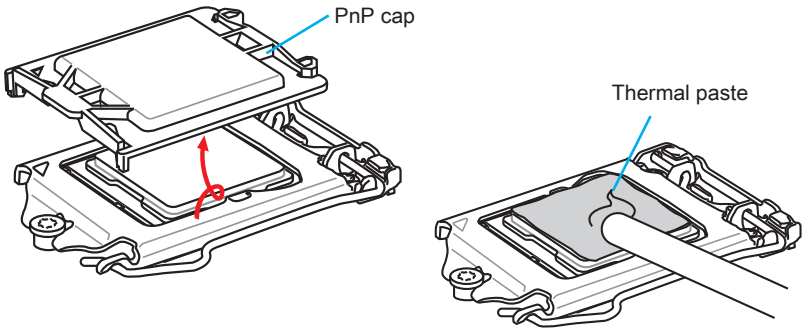

7. Locate the CPU fan connector on the motherboard.
8. Place the heatsink on the motherboard with the fan's cable facing towards the fan connector and the fasteners matching the holes on the motherboard.

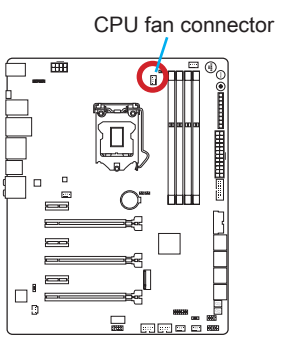

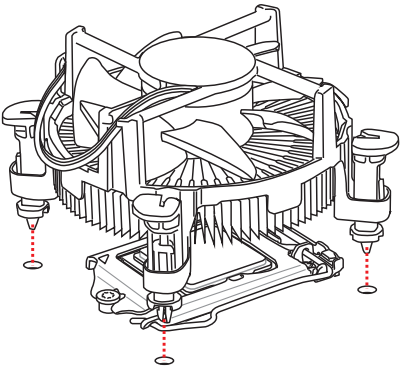

9. Push down the heatsink until the four fasteners get wedged into the holes on the motherboard. Press the four fasteners down to fasten the heatsink. As each fastener locks into position a click should be heard.
10. Inspect the motherboard to ensure that the fastener-ends have been properly locked in place.
11. Finally, attach the CPU fan cable to the CPU fan connector on the motherboard.

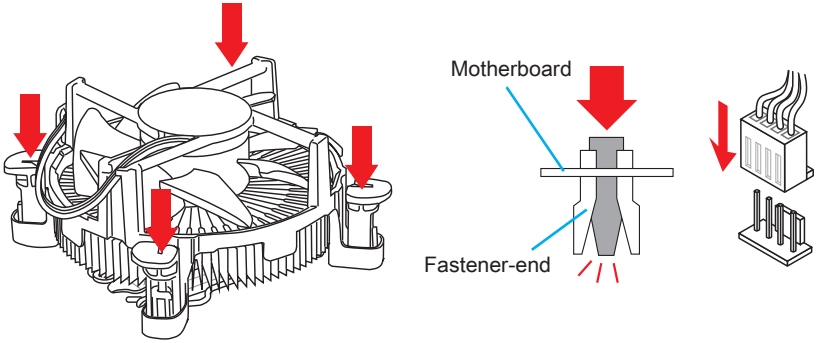

Important

- *Confirm that the CPU heatsink has formed a tight seal with the CPU before booting your system.*
- *Whenever the CPU is not installed, always protect the CPU socket pins by covering the socket with the plastic cap.*
- *If you purchased a separate CPU and heatsink/ cooler, Please refer to the documentation in the heatsink/ cooler package for more details about installation.*

Memory

These DIMM slots are used for installing memory modules.

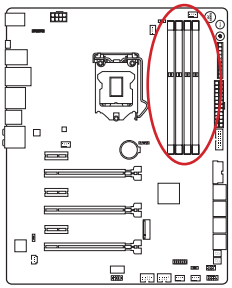

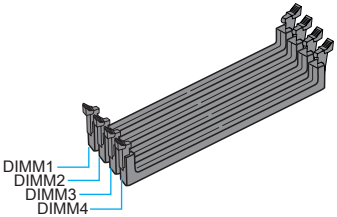

Video Demonstration

Watch the video to learn how to install memories.
http://youtu.be/76yLtJaKICQ

Dual-Channel mode Population Rule

In Dual-Channel mode, the memory modules can transmit and receive data with two data bus channels simultaneously. Enabling Dual-Channel mode can enhance system performance. The following illustrations explain the population rules for Dual-Channel mode.

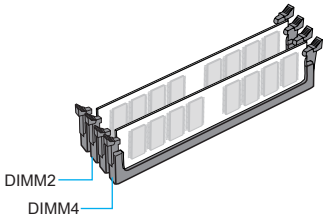

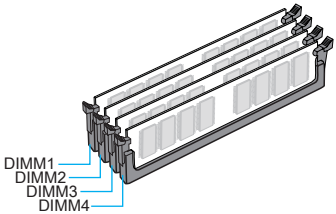

Important

- *DDR3 memory modules are not interchangeable with DDR2, and the DDR3 standard is not backward compatible. Always install DDR3 memory modules in DDR3 DIMM slots.*
- *To ensure system stability, memory modules must be of the same type and density in Dual-Channel mode.*
- *Due to chipset resource usage, the system will only detect up to 31+ GB of memory (not full 32 GB) when all DIMM slots have 8GB memory modules installed.*

Mounting Screw Holes

When installing the motherboard, first install the necessary mounting stands required for an motherboard on the mounting plate in your computer case. If there is an I/O back plate that came with the computer case, please replace it with the I/O backplate that came with the motherboard package. The I/O backplate should snap easily into the computer case without the need for any screws. Align the mounting plate's mounting stands with the screw holes on the motherboard and secure the motherboard with the screws provided with your computer case. The locations of the screw holes on the motherboard are shown below. For more information, please refer to the manual that came with the computer case.

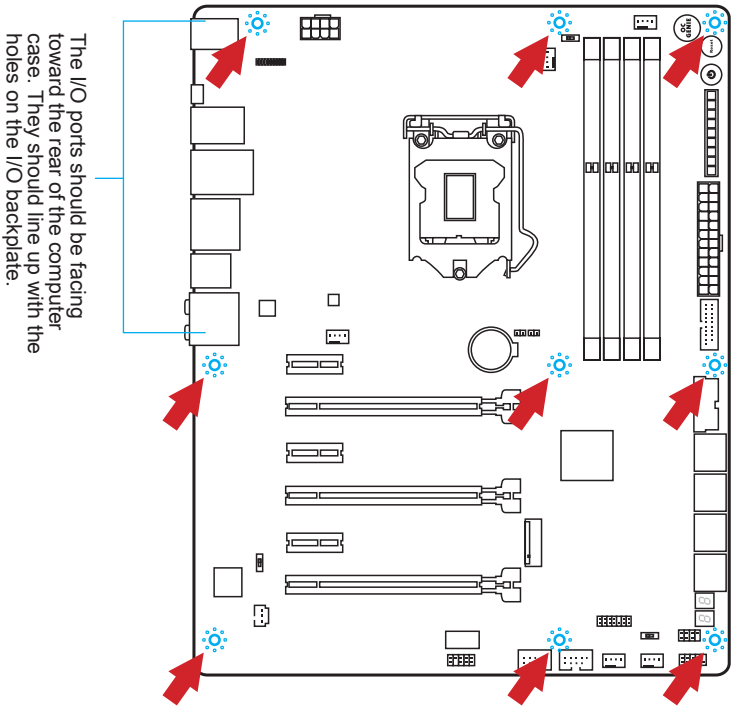

Important

- *Please note that, before installing the motherboard into the case, you have to remove the I/O cover nuts on back of the motherboard.*
- *Install the motherboard on a flat surface free from unnecessary debris.*
- *To prevent damage to the motherboard, any contact between the motherboard circuitry and the computer case, except for the mounting stands, is prohibited.*
- *Please make sure there are no loose metal components on the motherboard or within the computer case that may cause a short circuit of the motherboard.*

Video Demonstration

Watch the video to learn how to install power supply connectors.
http://youtu.be/gkDYyR_83l4

JPWR1~2: ATX Power Connectors

These connectors allow you to connect an ATX power supply. To connect the ATX power supply, align the power supply cable with the connector and firmly press the cable into the connector. If done correctly, the clip on the power cable should be hooked on the motherboard's power connector.

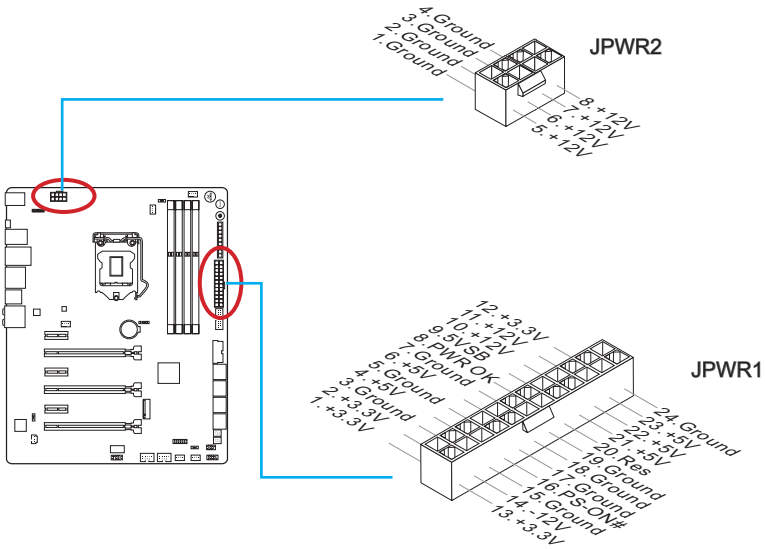

Important

Make sure that all the power cables are securely connected to a proper ATX power supply to ensure stable operation of the motherboard.

Expansion Slots

This motherboard contains numerous slots for expansion cards, such as discrete graphics or audio cards.

PCI_E1~6: PCIe Expansion Slots

The PCIe slot supports the PCIe interface expansion card.

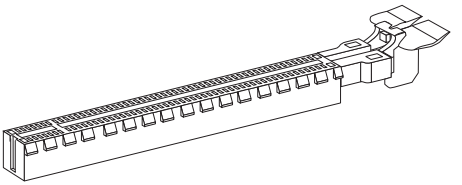

PCIe 3.0 x16 Slot

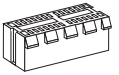

PCIe 2.0 x1 Slot

Important

When adding or removing expansion cards, always turn off the power supply and unplug the power supply power cable from the power outlet. Read the expansion card's documentation to check for any necessary additional hardware or software changes.

Video/ Graphics Cards

If available, this motherboard takes advantage of the CPU's integrate graphics processor, but discrete video cards can be installed by way of the motherboard's expansion slots. Adding on one or more discrete video cards will significantly boost the system's graphics performance. For best compatibility, MSI graphics cards are recommended.

Video Demonstration

Watch the video to learn how to install a graphics card on PCIe x16 slot with butterfly lock.

http://youtu.be/mG0GZpr9w_A

Single Video Card Installation

1. Determine what type of expansion slot(s) the video card will use. Locate the expansion slot(s) on the motherboard. Remove any protective expansion slot covers from the computer case.
2. Line up the video card on top of the expansion slot(s) with the display ports facing out of the computer case. For a single video card installation, using the PCI_E2 slot is recommended.
3. Push the video card into its expansion slot(s). Depending on the expansion slot(s) used, there should be clip(s) on the expansion slot(s) that will lock in place.
4. If needed, screw the edge of the graphics card to the computer case. Some video cards might require a power cable directly from the power supply.
5. Please consult your video card's manual for further instructions regarding driver installation or other special settings.

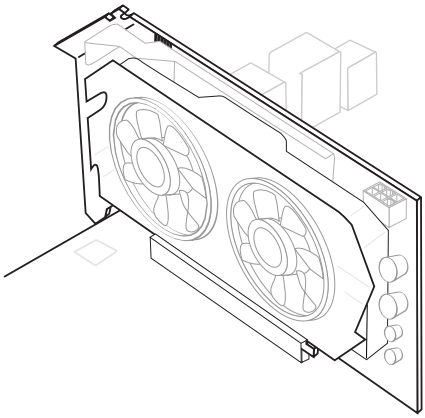

Internal Connectors

SATA1~8: SATA Connectors

This connector is a high-speed SATA interface port. Each connector can connect to one SATA device. SATA devices include disk drives (HDD), solid state drives (SSD), and optical drives (CD/ DVD/ Blu-Ray).

Video Demonstration

Watch the video to learn how to Install SATA HDD.
http://youtu.be/RZsMpqxythc

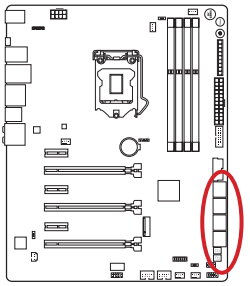

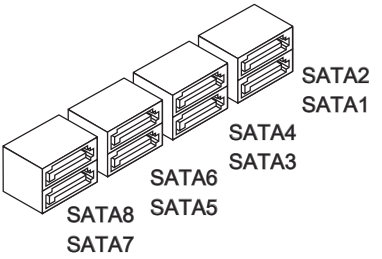

SATA1~6 (6Gb/s, by Intel® Z97)
SATA7~8 (6Gb/s, by ASMedia® ASM1061)

Important

- *The SATA5 and SATA6 ports will be unavailable when installing a module in the M.2 port.*
- *Many SATA devices also need a power cable from the power supply. Such devices include disk drives (HDD), solid state drives (SSD), and optical drives (CD / DVD / Blu-Ray). Please refer to the device's manual for further information.*
- *Many computer cases also require that large SATA devices, such as HDDs, SSDs, and optical drives, be screwed down into the case. Refer to the manual that came with your computer case or your SATA device for further installation instructions.*
- *Please do not fold the SATA cable at a 90-degree angle. Data loss may result during transmission otherwise.*
- *SATA cables have identical plugs on either sides of the cable. However, it is recommended that the flat connector be connected to the motherboard for space saving purposes.*

CPUFAN1~2,SYSFAN1~3: Fan Power Connectors

The fan power connectors support system cooling fans with +12V. If the motherboard has a System Hardware Monitor chipset on-board, you must use a specially designed fan with a speed sensor to take advantage of the CPU fan control. Remember to connect all system fans. Some system fans may not connect to the motherboard and will instead connect to the power supply directly. A system fan can be plugged into any available system fan connector.

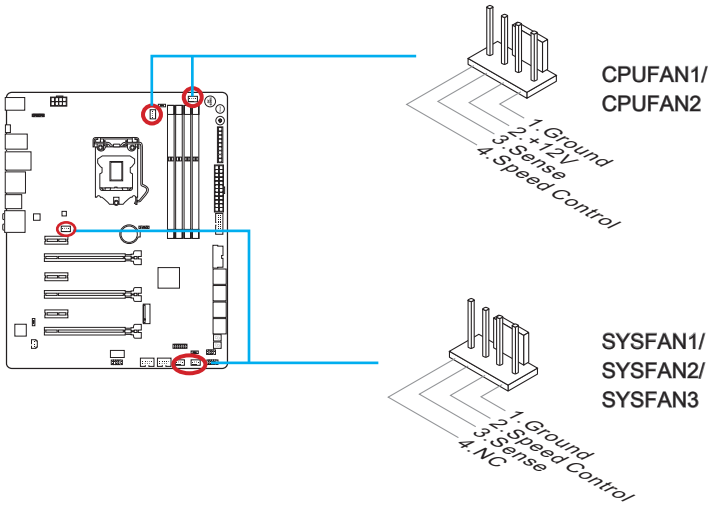

Important

- *Please refer to your processor's official website or consult your vendor to find recommended CPU heatsink.*
- *These connectors support Smart Fan Control with liner mode. The Command Center utility can be installed to automatically control the fan speeds according to the CPU's and system's temperature.*
- *If there are not enough ports on the motherboard to connect all system fans, adapters are available to connect a fan directly to a power supply.*
- *Before first boot up, ensure that there are no cables impeding any fan blades.*

JFP1, JFP2: System Panel Connectors

These connectors connect to the front panel switches and LEDs. The JFP1 connector is compliant with the Intel® Front Panel I/O Connectivity Design Guide. When installing the front panel connectors, please use the optional M-Connector to simplify installation. Plug all the wires from the computer case into the M-Connector and then plug the M-Connector into the motherboard.

Video Demonstration

Watch the video to learn how to Install front panel connectors.
http://youtu.be/DPELIdVNZUI

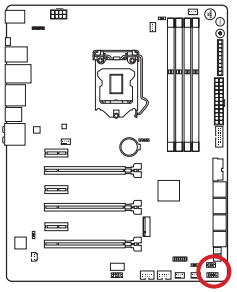

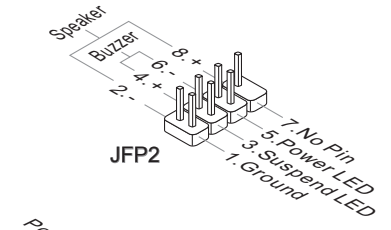

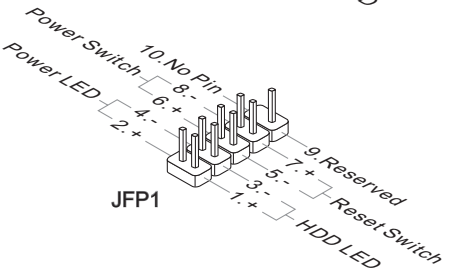

Important

- *On the connectors coming from the case, pins marked by small triangles are positive wires. Please use the diagrams above and the writing on the optional M-Connectors to determine correct connector orientation and placement.*
- *The majority of the computer case's front panel connectors will primarily be plugged into JFP1.*

JUSB1~2: USB 2.0 Expansion Connectors

This connector is designed for connecting high-speed USB peripherals such as USB HDDs, digital cameras, MP3 players, printers, modems, and many others.

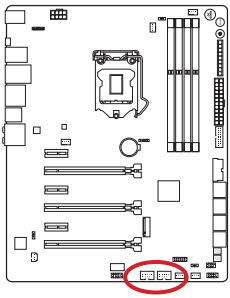

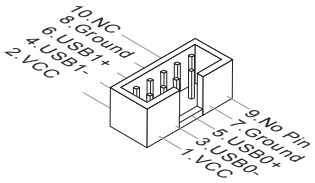

The JUSB1 **(red mark)** connector supports MSI's new Super-Charger technology which provides quicker USB charging of your smartphone or other USB-powered devices. To enable this feature, please install the MSI Super-Charger application on your computer. When the Super-Charger application is turned on, the JUSB1 connector will convert data channels to extra power channels to quickly charge your connected device. Please note that when the Super-Charger application is turned on, data transmission and synchronization over the JUSB1 connector will not function. To enable the JUSB1 connector to function as a normal USB 2.0 connector, please turn off the Super-Charger application. When the computer is in stand-by or hibernation mode (S3/ S4/ S5) Super-Charger mode will automatically be enabled.

Video Demonstration

Watch the video to learn how to charge the smartphone with Super-Charger.
http://youtu.be/FCyvjr5NbOw

Important

- *Note that the VCC and GND pins must be connected correctly to avoid possible damage.*
- *Please only connect one device per USB port to ensure stable charging.*
- *Super-Charger Technology is only available on select MSI motherboard models. Please refer to the MSI website to check if your motherboard has Super-Charger technology.*
- *For iPad, JUSB1 **(red mark)** can still charge iPad in S3, S4, S5 state.*
- *We recommend that don't disconnect the device when you charge it in S1 state.*

JUSB3~4: USB 3.0 Expansion Connectors

The USB 3.0 port is backwards compatible with USB 2.0 devices. It supports data transfer rates up to 5Gbits/s (SuperSpeed).

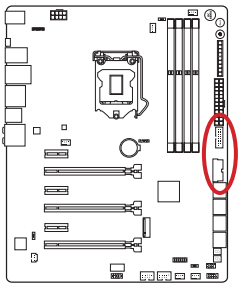

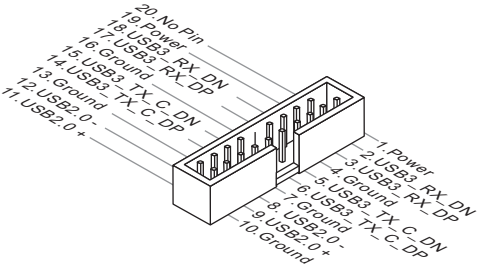

Important

- *Note that the VCC and GND pins must be connected correctly to avoid possible damage.*
- *To use a USB 3.0 device, you must connect the device to a USB 3.0 port through an optional USB 3.0 compliant cable.*

JCI1: Chassis Intrusion Connector

This connector connects to the chassis intrusion switch cable. If the computer case is opened, the chassis intrusion mechanism will be activated. The system will record this intrusion and a warning message will flash on screen. To clear the warning, you must enter the BIOS utility and clear the record.

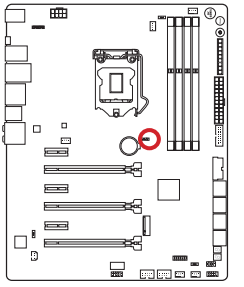

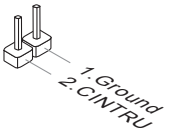

JAUD1: Front Panel Audio Connector

This connector allows you to connect the front audio panel located on your computer case.

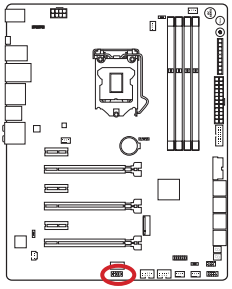

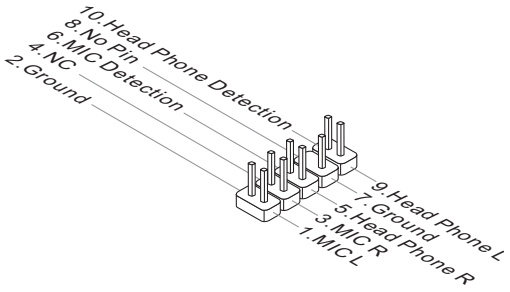

AUDPWR1: Direct Audio Power Connector

This connector is used to provide direct power to back panel audio ports. The direct audio power can provide the better audio quality. Please connect this connector with a power supply by an audio power adapter.

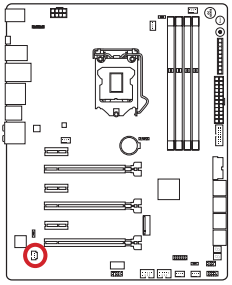

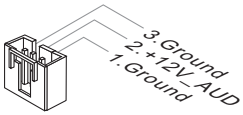

Important

After connecting the direct power to this connector, please note that you have to enable the "Direct Audio Power" by adjusting the audio power switch (AUD_SW1).

M2_1: M.2 Port

The M.2 port supports either M.2 SATA 6Gb/s module or M.2 PCIe module.

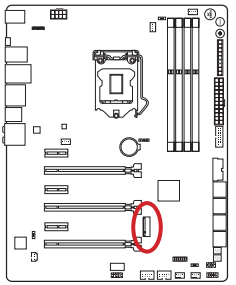

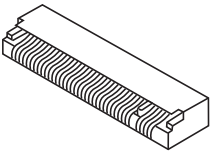

Important

- *The SATA5 and SATA6 ports will be unavailable when installing a module in the M.2 port.*
- *Intel RST only supports PCIe M.2 SSD with UEFI ROM, does not support Legacy ROM.*
- *M.2 PCIe interface does not support RAID 0, RAID1, RAID 5 and RAID 10.*

JTPM1: TPM Module Connector

This connector connects to a TPM (Trusted Platform Module). Please refer to the TPM security platform manual for more details and usages.

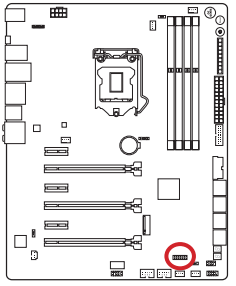

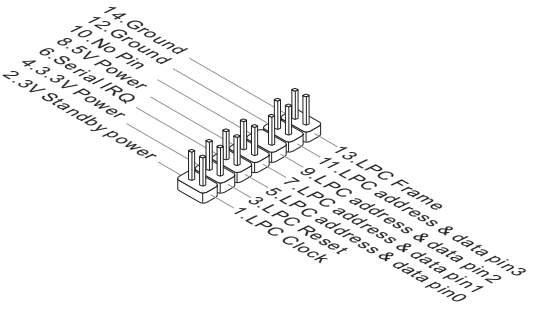

Voltage Checkpoints

These voltage checkpoints are used to measure the current system voltages. A multimeter (not included) will be required to check voltages.

FV1: V-Check Connectors

To check the voltage, please use the optional voltage checkpoint cables included in the motherboard package. Attach the positive lead of the multimeter to the voltage checkpoint cable and the negative lead to the ground connector.

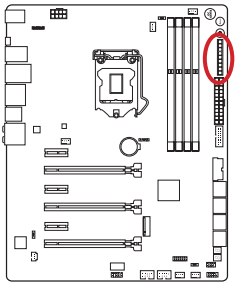

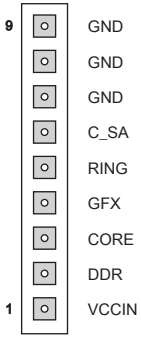

Connector	Description
GND (pin 7~9)	Ground
C_SA (pin 6)	The CPU_SA (CPU System Agent) voltage is the voltage supplied to the integrated memory controller inside the CPU.
RING (pin 5)	The CPU Ring is an interface for integrated controllers inside the CPU. The CPU Ring voltage can affect the CPU overclocking performance.
GFX (pin 4)	The CPU_GFX voltage is the voltage supplied to the integrated graphics processor located on the CPU.
CORE (pin 3)	CPU core0 voltage. The CPU voltage is the voltage supplied to the CPU core. Higher overclocks may require higher CPU core voltages to maintain stability.
DDR (pin 2)	Memory voltage. The DDR memory voltage is the voltage supplied to the DDR memory modules on the motherboard. Lower memory timings may require higher voltages to maintain system stability.
VCCIN (pin1)	The CPU VCCIN voltage is the CPU power source that is shared with components of the CPU.

Buttons

The motherboard has numerous on-board buttons to control various functions. This section will explain how to change your motherboard's functions through the use of these on-board buttons.

OC1: OC Genie Button

This button is used to automatically overclock the system. To enable OC Genie, Set this button to ON while the system is in power off mode. On the next boot, the processor will be automatically overclock for optimal performance. To disable OC Genie, Set this button to OFF while the system is in power off mode and the configuration parameters will return to its normal values.

Video Demonstration

Watch the video to learn how to use the OC Genie button.
http://youtu.be/nIpRvWkUazg

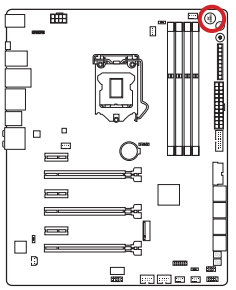



On



Off

Important

- *This motherboard provides two ways to enable OC Genie: press the physical OC Genie button on the motherboard, or click the virtual OC Genie button in BIOS. You can specify how OC Genie to be enabled by using the "OC Genie Function Control" item in BIOS.*
- *Please install DDR3 1333 or faster memory and equip a better heatsink/cooler to use the OC Genie function.*
- *We do not guarantee the OC Genie overclocking range or the damages/risks caused by overclocking behavior.*
- *It is possible to disable the OC Genie function in the BIOS setup. Please refer to the BIOS section of the manual for instructions on how to turn off OC Genie from the BIOS.*
- *The usage of OC Genie is at the user's own risk. Overclocking is never guaranteed by MSI.*
- *To ensure successfully OC Genie usage, MSI components are recommended.*

POWER1: Power Button

This button is used to turn-on and turn-off the system. Press the button once to turn-on or turn-off the system.

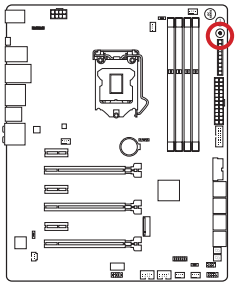



RESET1: Reset Button

This reset button is used to reset the system. Press the button to reset the system.

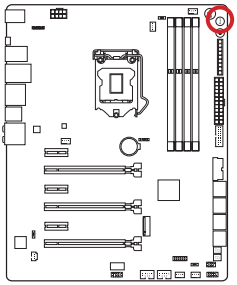



Jumper

JBAT1: Clear CMOS Jumper

There is CMOS RAM onboard that is external powered from a battery located on the motherboard to save system configuration data. With the CMOS RAM, the system can automatically boot into the operating system (OS) every time it is turned on. If you want to clear the system configuration, set the jumpers to clear the CMOS RAM.

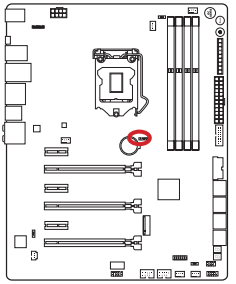



Keep Data



Clear Data

Important

You can clear the CMOS RAM by shorting this jumper while the system is off. Afterwards, open the jumper . Do not clear the CMOS RAM while the system is on because it will damage the motherboard.

Switch

BIOS_SW1: Multi-BIOS Switch

This motherboard has two built-in BIOS ROMs (Labeled A and B, default BIOS ROM is A). If one is crashed, you can shift to the other for booting by sliding the switch. In addition, these two BIOS ROMs do not have the Auto Recovery feature, you need to maintain or update the BIOS version by yourself.

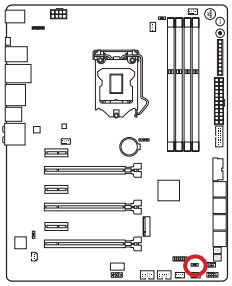

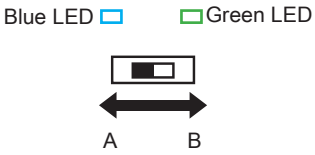

BIOS recovery with AFUDOS command

When BIOS updating fails or causes the computer non-bootable, you can recover the failed BIOS by the steps below.

Preparation:

1. Prepare a bootable USB flash drive.
2. Download the latest BIOS file from the MSI official website at www.msi.com, and then decompress the file.
3. Copy the AFUDE238.exe and the BIOS file to the bootable USB flash drive

BIOS recovery steps:

1. Power off the computer.
2. Set the Multi-BIOS switch to the functional BIOS ROM.
3. Insert the bootable USB flash drive you have made to the USB port.
4. Boot the computer into the bootable USB flash drive.
5. Set the Multi-BIOS switch to the failed BIOS ROM.
6. Execute the below command to flash the BIOS:
   For example: AFUDE238 EXXXXIMS.XXX
7. Restart the computer after the BIOS flashing is complete.

Important

Do not use the Multi-BIOS switch when system is booting up.

SLOW_1: Slow Mode Booting Switch

This switch is used for LN2 cooling solution, that provides the extreme overclocking conditions, to boot at a stable processor frequency and to prevent the system from crashing.

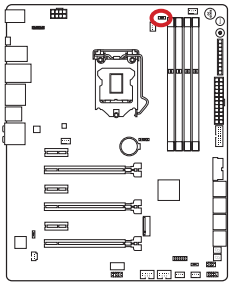

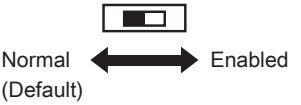

Important

Users will try extreme low temperature overclocking at their own risks. The overclocking results will vary according to the CPU version.

AUD_SW1: Audio Power Switch

This switch specifies the power mode for back panel audio ports.

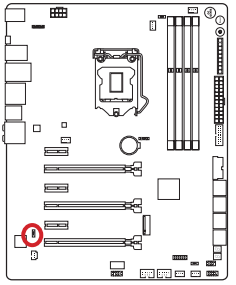

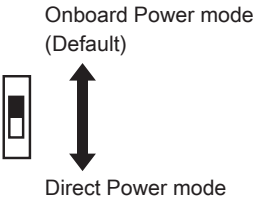

Important

- *Before switching to "Direct Power mode", please make sure the "Direct Audio Power Connector" (AUDPWR1) has been connected to the power supply.*
- *Do not use the audio power switch while the system is on because it may damage the motherboard.*

LED Status Indicators

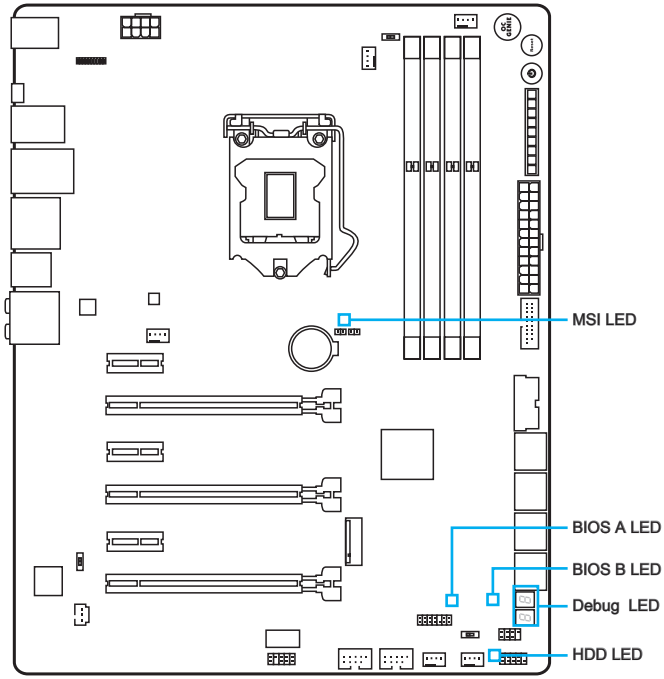

LED Status Table

The following table describes the status of LED indicators.

LED	LED Status	Description
MSI	On	Debug
HDD	Blinking	HDD activity
BIOS A LED	Blue	BIOS A in operation
BIOS B LED	Green	BIOS B in operation

Debug Code LED Table

Please refer to the table below to get more information about the Debug Code LED message.

Post	Status
02,07	Power on CPU Initialization
03,08	Power on North Bridge Initialization
04,09	Power on South Bridge Initialization
0B	Power on Cache Initialization
11~14,32~36,56~5A	Early CPU Initialization
15~18,37~3A	Early North Bridge Initialization
19~1C,3B~3E	Early South Bridge Initialization
1D~2F,31,3F~4E,50~55	Early Memory Initialization
63~67,D0	Late CPU Initialization
69~6F,D1	Late North Bridge Initialization
70~77,D2	Late South Bridge Initialization
92~96,B5,D4	PCI bus Initialization
97,98,99,B2,D5~D7	Console Output/Input devices/Console initialization and Load Option ROM (VGA, RAID, parallel ports, serial ports……)
9A~A7,B4	Onboard devices Initialize and Detect (USB/ SATA/ SCSI……)
A8,A9,AB	Start of Setup. BIOS setup if needed/ requested.
AD/AE	Ready To Boot event/Legacy Boot event
CPU temperature	Fully boot

Drivers and Utilities

After you install the operating system you will need to install drivers to maximize the performance of the new computer you just built. MSI motherboard comes with a Driver Disc. Drivers allow the computer to utilize your motherboard more efficiently and take advantage of any special features we provide.

You can protect your computer from viruses by installing the bundled security program. The bundle also includes a variety of powerful and creative utilities.

Driver/ Utilities Installation

Please follow the steps below to install drivers and utilities for your new computer.

1. Insert MSI Driver Disc into the optical drive. The installer will automatically appear if autorun is enabled in OS.
2. Installer will automatically find and list all necessary drivers.
3. Click **Install** button.

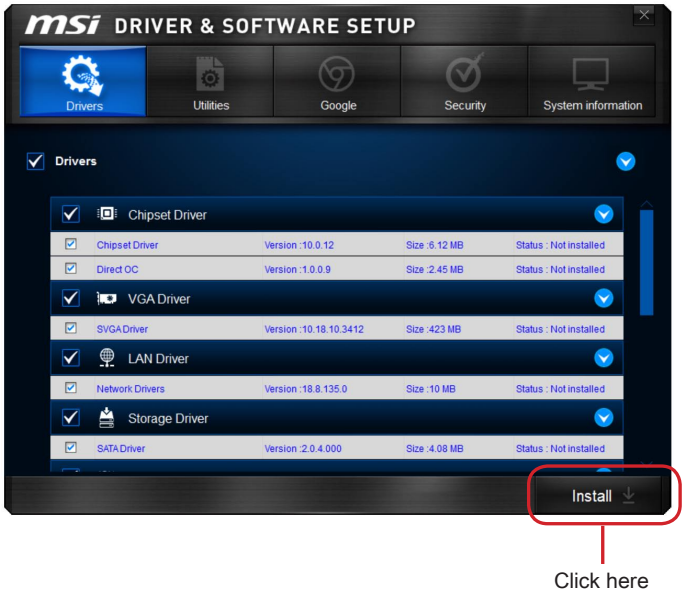

4. The software installation will then be in progress, after it has finished it will prompt you to restart.
5. Click **OK** button to finish.
6. Restart your computer.

You can also use the same method to install the utilities.

Chapter 2

Quick Installation

This chapter provides demonstration diagrams about how to install your computer. Some of the installations also provide video demonstrations. Please link to the URL to watch it with the web browser on your phone or tablet. You may have even link to the URL by scanning the QR code.



Important

The diagrams in this chapter are for reference only and may vary from the product you purchased.

CPU Installation

http://youtu.be/bf5La099url

1

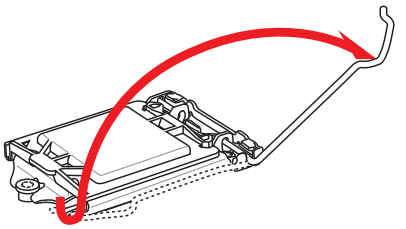

2

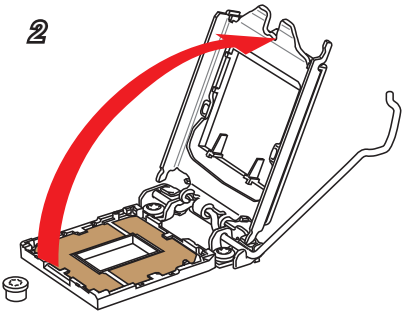

3

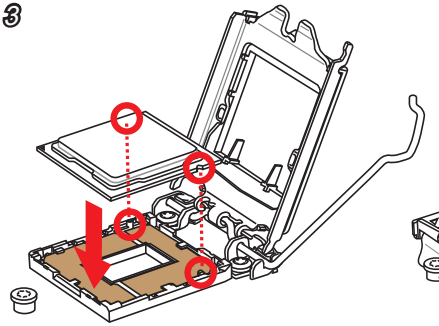

4

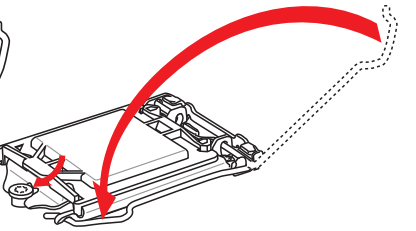

5

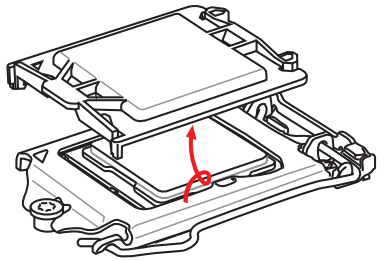

6

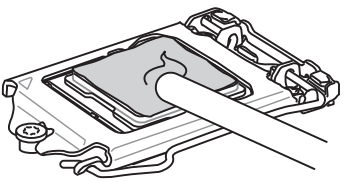

7

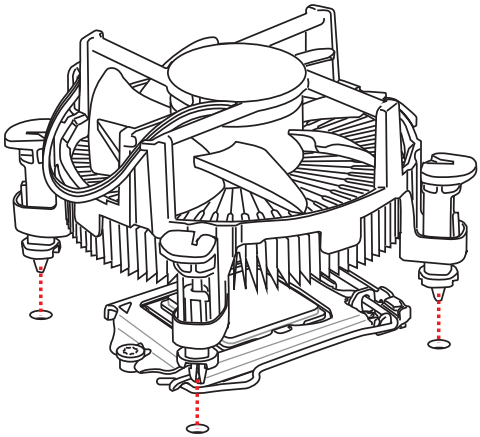

8

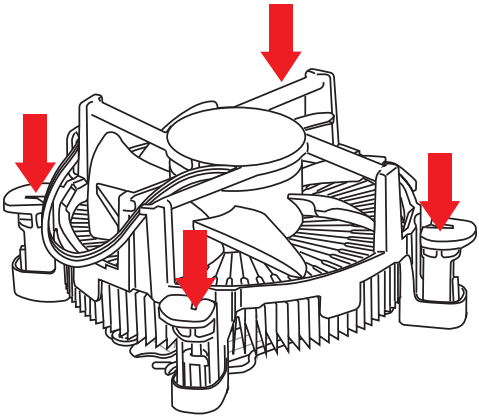

9

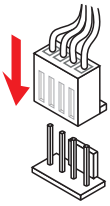

http://youtu.be/76yLtJaKlCQ

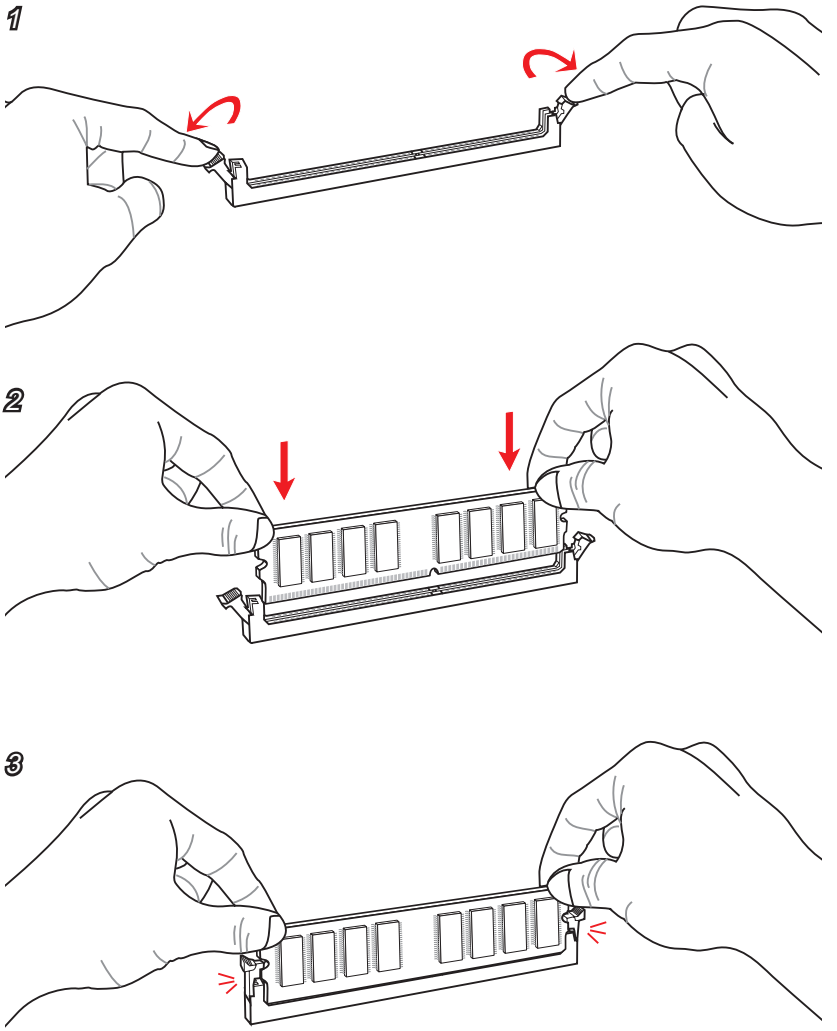

1

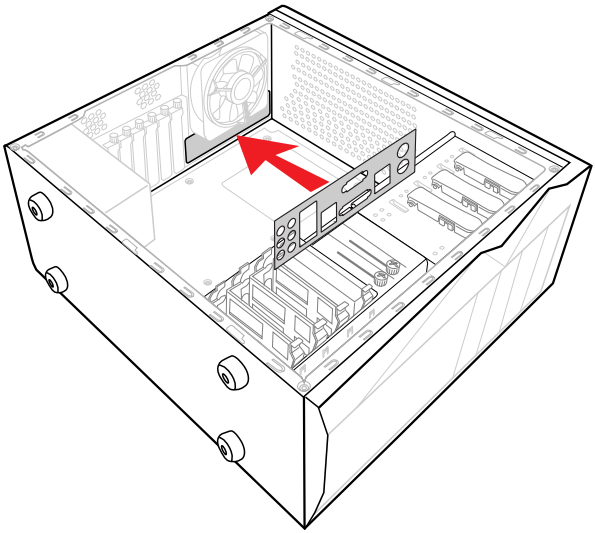

2

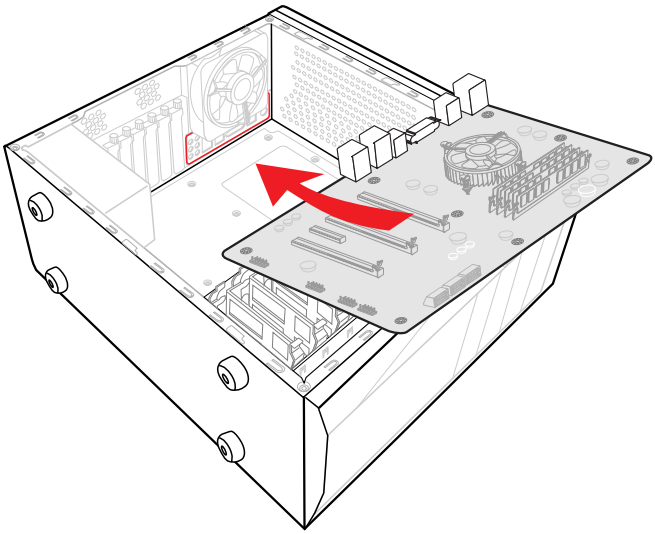

3

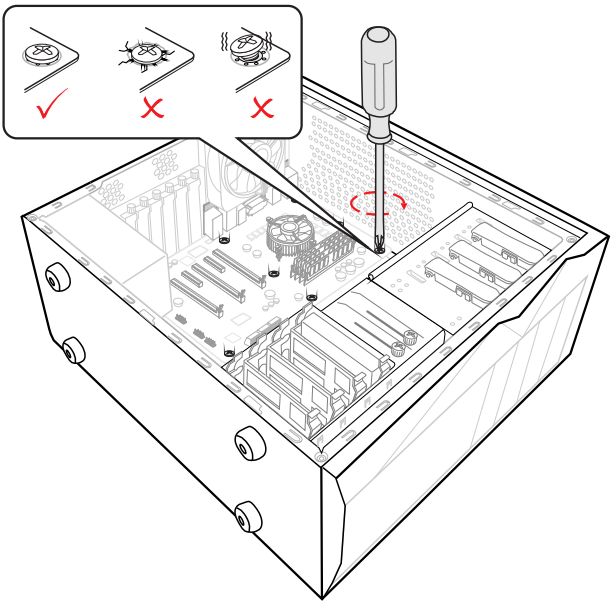

1

http://youtu.be/gkDYyR_83l4

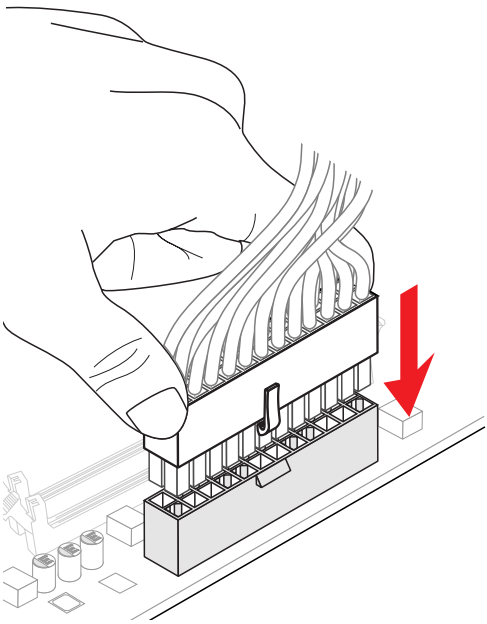

2

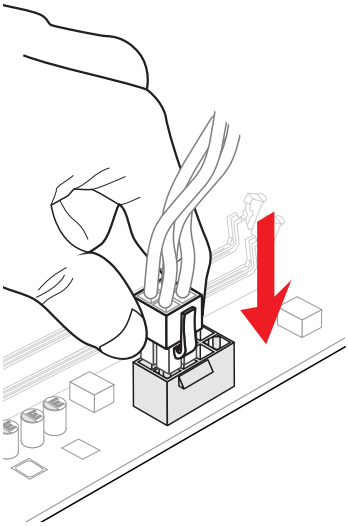

or

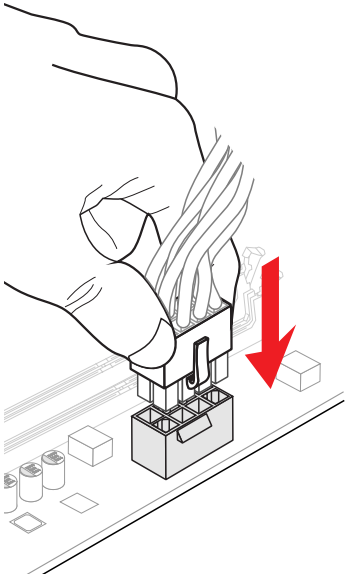

3

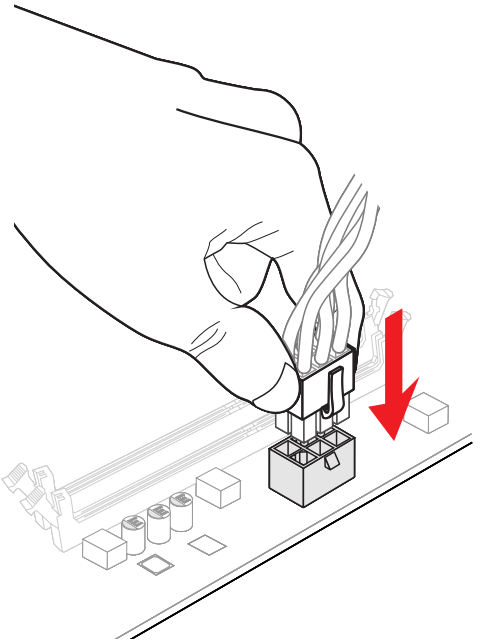

http://youtu.be/RZsMpqxythc

1

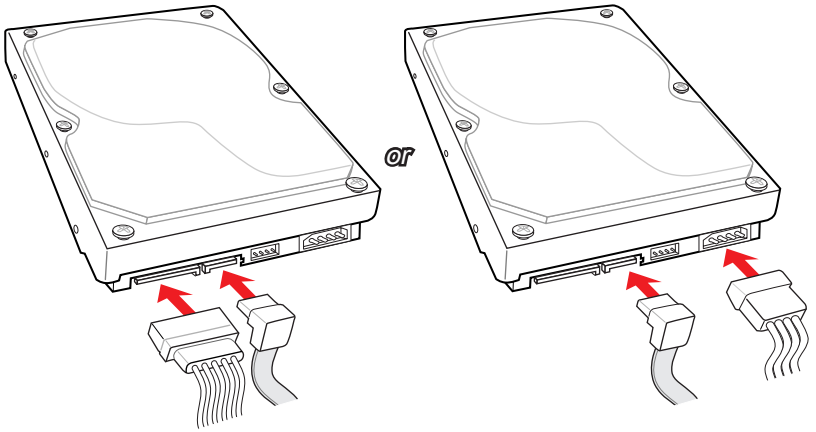

2

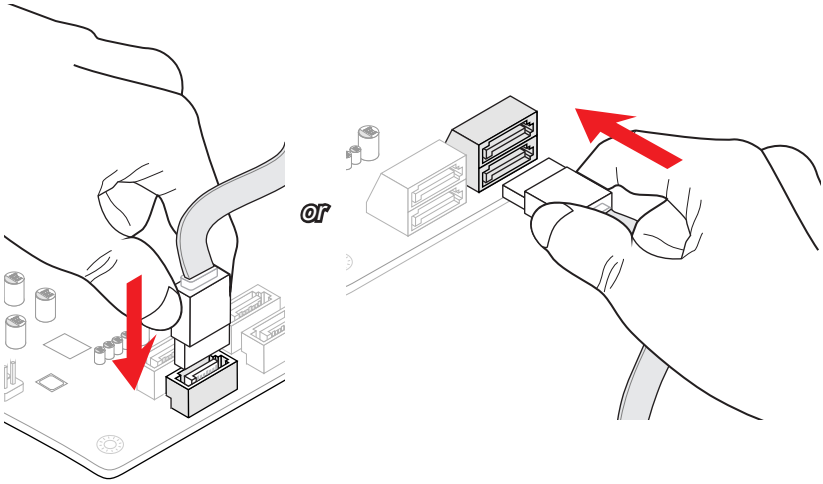

M.2 module Installation

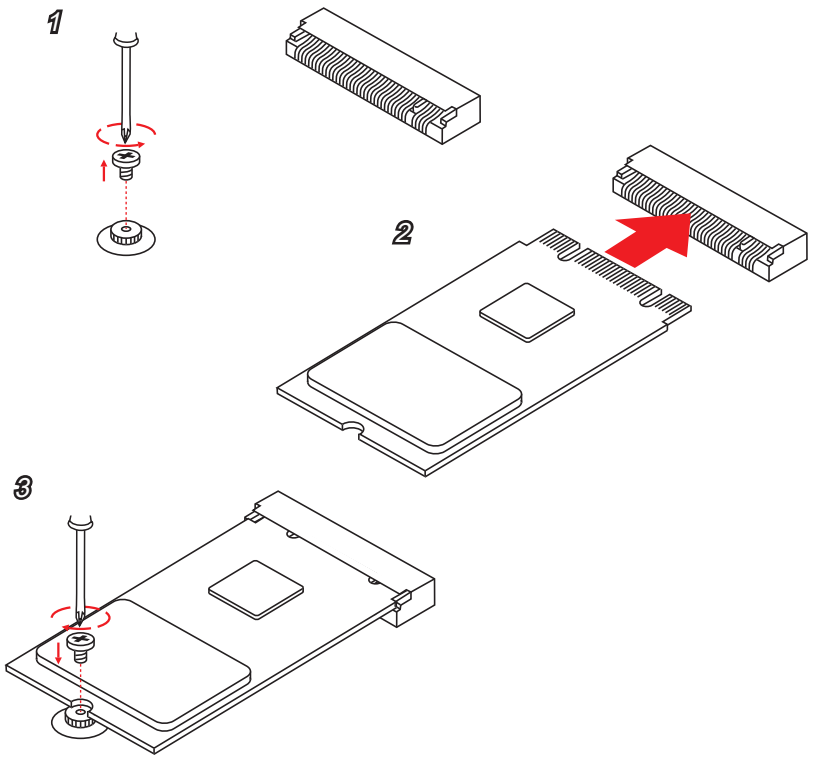

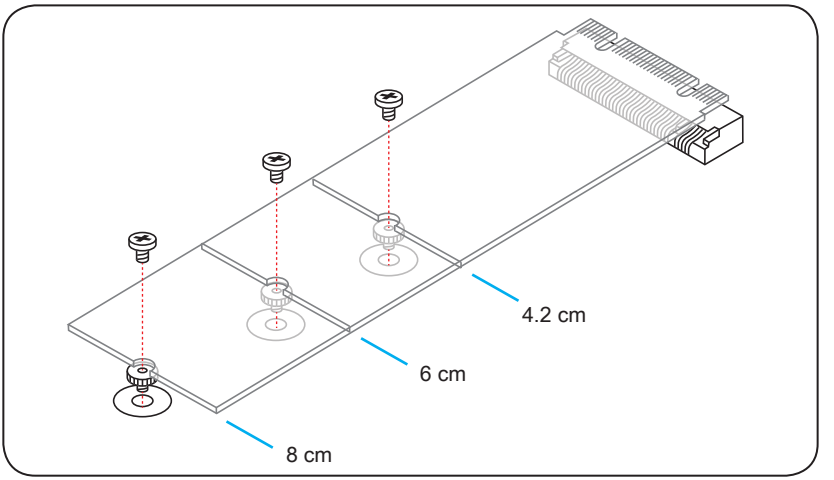

JFP1 Connector Installation

http://youtu.be/DPELIdVNZUI

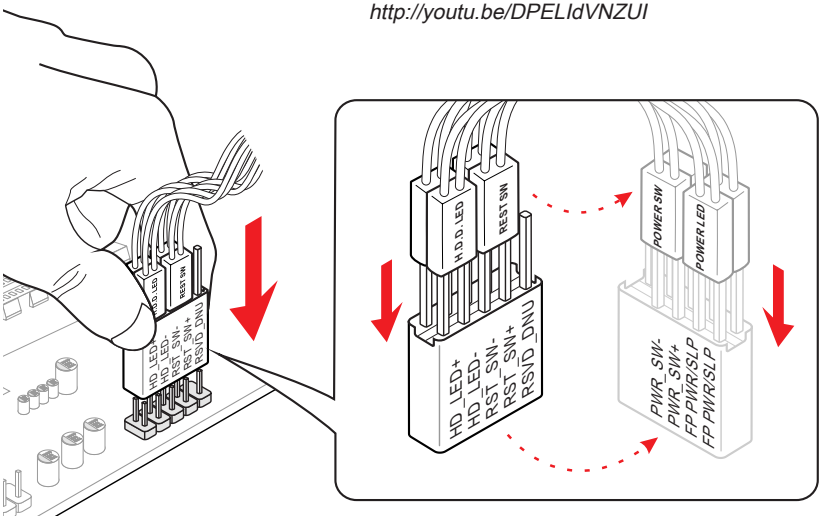

Front Panel Audio Connector Installation

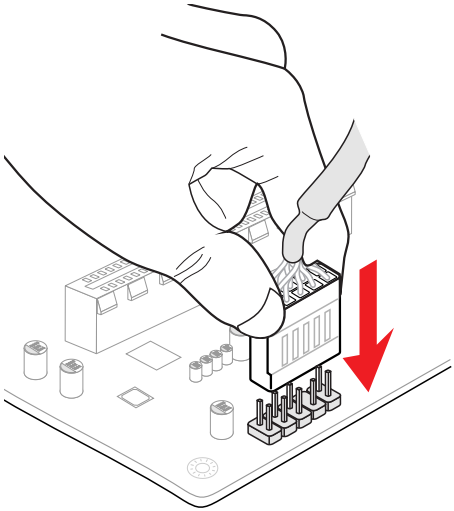

USB2.0 Connector Installation

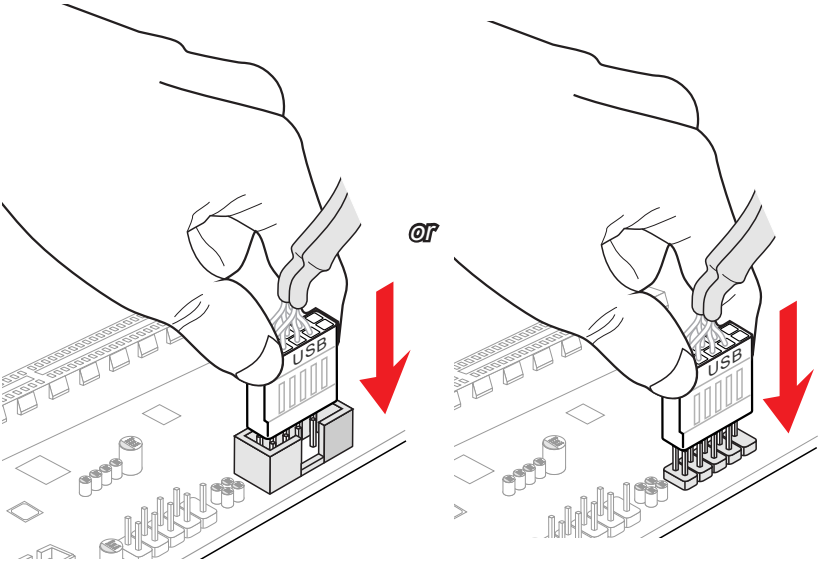

USB3.0 Connector Installation

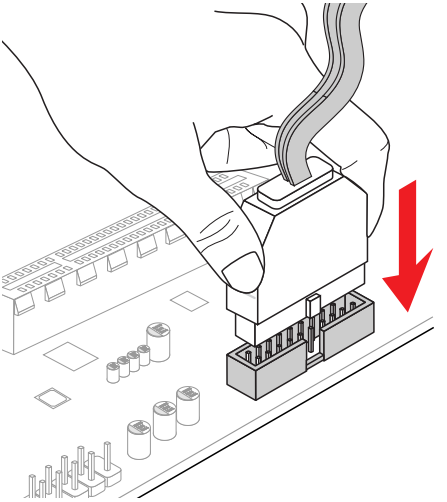

http://youtu.be/mG0GZpr9w_A

1

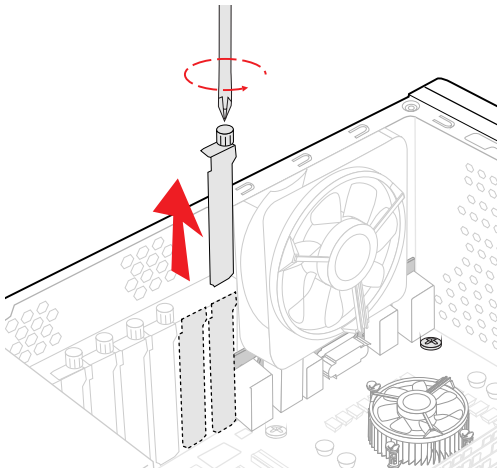

2

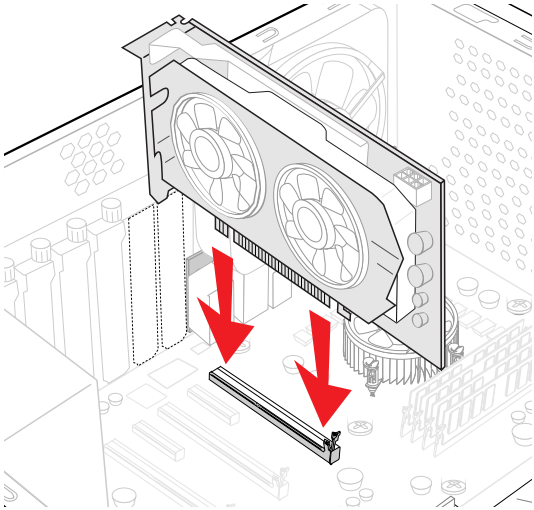

3

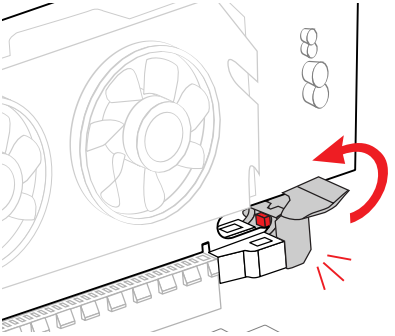

4

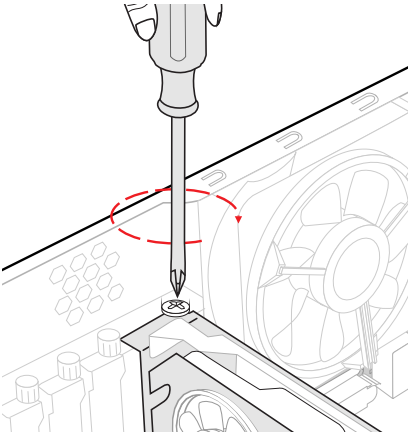

5

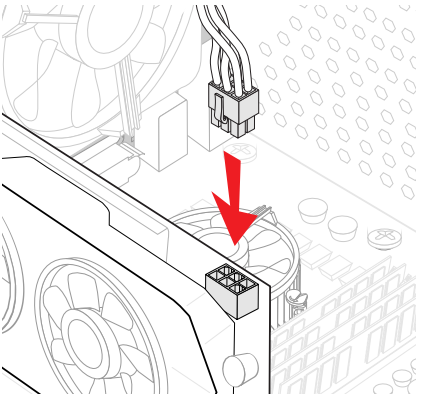

Chapter 3

BIOS Setup

CLICK BIOS is a revolutionary UEFI interface that allows you to setup and configure your system for optimum use. Using your mouse and keyboard, users can change BIOS settings, monitor CPU temperature, select the boot device priority and view system information such as the CPU name, DRAM capacity, the OS version and the BIOS version. Users can import and export parameter data for backup or for sharing with friends.

Important

- *The items under each BIOS category described in this chapter are under continuous update for better system performance. Therefore, the description may be slightly different from the latest BIOS and should be held for reference only.*
- *The pictures in this chpater are for reference only and may vary from the product you purchased. Please refer to the actual screens of your system for detailed information.*
- *Please clear the CMOS data and restore the default settings if the system becomes unbootable after changing BIOS settings. (Refer to the Clear CMOS jumper/ button section to clear the CMOS data, select the "Restore Defaults" and press <Enter> in BIOS to load the default settings.)*

Entering Setup

The default settings offer the optimal performance for system stability in normal conditions. You may need to run the Setup program when:

- An error message appears on the screen during the system booting up, and requests you to run SETUP.
- You want to change the default settings for customized features.

Important

- *Please clear the CMOS data and restore the default settings if the system becomes unbootable after changing BIOS settings. (Refer to the Clear CMOS jumper/ button section to clear the CMOS data, select the "Restore Defaults" and press <Enter> in BIOS to load the default settings.)*
- *If you are unfamiliar with the BIOS settings, we recommend that you keep the default settings to avoid possible system damage or failure booting due to inappropriate BIOS configuration.*

Entering BIOS Setup

Power on the computer and the system will start the Power On Self Test (POST) process. When the message below appears on the screen, press <DEL> key to enter BIOS:

Press <Del> to run BIOS setup, or <F11> to run boot menu

If the message disappears before you respond and you still need to enter BIOS, restart the system by turning the computer OFF then back ON or pressing the RESET button. You may also restart the system by simultaneously pressing <Ctrl>, <Alt>, and <Delete> keys.

MSI additionally provides two methods to enter the BIOS setup. You can click the “GO2BIOS” tab on “MSI Fast Boot” utility screen or press the physical “GO2BIOS" button (optional) on the motherboard to enable the system going to BIOS setup directly at next boot.



Click "GO2BIOS" tab on "MSI Fast Boot" utility screen.

Important

Please be sure to install the “MSI Fast Boot” utility before using it to enter the BIOS setup.

Overview

After entering BIOS, the following screen is displayed.

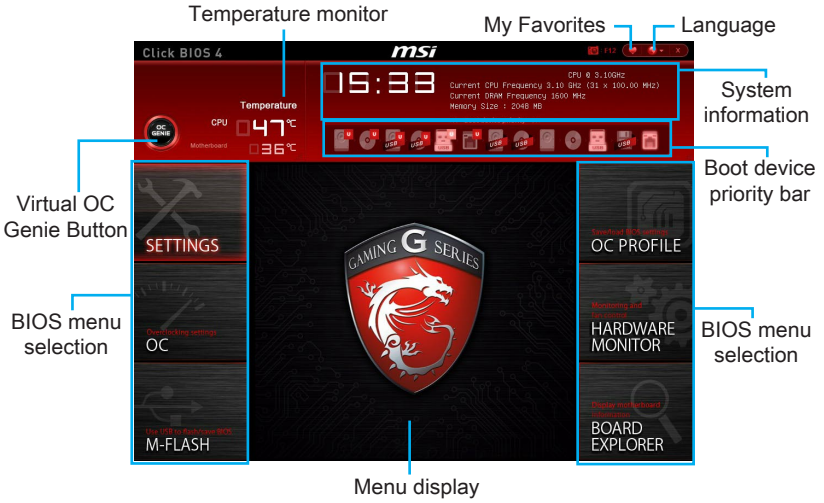

▸BIOS menu selection

The following options are available:

- **SETTINGS** - Uses this menu to specify the parameters for chipset and boot devices.
- **OC** - This menu contains the frequency and voltage adjustments. Increasing the frequency can get better performance, however high frequency and heat can cause instability, we do not recommend general users to overclock.
- **M-FLASH** - This menu provides the way to update BIOS with a USB flash disk.
- **OC PROFILE** -This menu is used to set various overclocking profiles.
- **HARDWARE MONITOR** - This menu is used to set the speeds of fans and monitor voltages of system.
- **BOARD EXPLORER** - It provides the information of the installed devices on the motherboard.

▸**Virtual OC Genie Button**

Enables or disables the OC Genie function by clicking on this button. When enabled, this button will be light. Enabling OC Genie function can automatically overclock with MSI optimized overclocking profile.

Important

We recommend that you do not to make any modification in OC menu mode and do not to load defaults after enabling the OC Genie function.

▸**Menu display**

This area provides BIOS setting items and information to be configured.

▸**Boot device priority bar**

You can move the device icons to change the boot priority.



High priority ⟶ Low priority

▸**System information**

Shows the time, date, CPU name, CPU frequency, DRAM frequency, DRAM capacity and the BIOS version.

▸**Language**

Allows you to select the language of the BIOS setup.

▸**Temperature monitor**

Shows the temperatures of the processor and the motherboard.

▸**My Favorites**

Allows you to create your personal BIOS menu where you can save and access your favorite/ frequently-used BIOS setting items.

- **Default HomePage** - Allows you to select a BIOS menu (e.g. Settings, OC...,etc) as the BIOS home page.
- **Favorite1~5** - Allows you to add the frequently-used/ favorite BIOS setting items in one page.

Adding BIOS item to Favorite 1~5

1. Move the mouse cursor to highlight a BIOS setting item.
2. Right-click (or press "F2" key) and then choose a favorite menu (Favorite 1~5) to add the BIOS item.

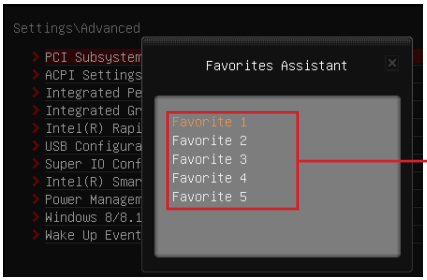

Deleting BIOS item from Favorite 1~5

1. Move the mouse cursor to highlight a BIOS item on the Favorite 1~5 menu.
2. Right-click (or press "F2" key) and then click "Delete" to delete the BIOS item.



Changing the order of BIOS items on Favorite 1~5

1. Enter the Favorite 1~5 menu.
2. Right-click (or press "F2" key) and then click "Menu lock".
3. Highlight an item and then click the arrow buttons (or press the up/ down arrow keys) to change the item order.
4. Finally, click the lock button to fix the order.

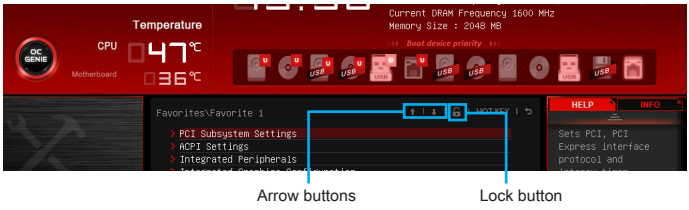

Chapter 3

Operation

You can control BIOS settings with the mouse and the keyboard. The following table lists and describes the hot keys and the mouse operations.

Hot key	Mouse	Description
<↑ ↓ → ← >	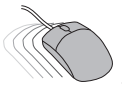 Move the cursor	Select Item
<Enter>	 Click/ Double-click the left button	Select Icon/ Field
<Esc>	 Click the right button	Jump to the Exit menu or return to the previous from a submenu
<+>		Increase the numeric value or make changes
<->		Decrease the numeric value or make changes
<F1>		General Help
<F2>		Favorites assistant
<F3>		Enter My Favorites menu
<F4>		CPU Specifications
<F5>		Enter Memory-Z
<F6>		Load optimized defaults
<F8>		Load Overclocking Profile
<F9>		Save Overclocking Profile
<F10>		Save Change and Reset
<F12>		Save a screenshot to a FAT/FAT32 USB drive

Updating BIOS

Updating the BIOS with M-FLASH

▸Before updating

Please download the latest BIOS file that matches your motherboard model from MSI website. And then save the BIOS file into the USB flash disk.

Important

Only the FAT32/ NTFS format USB flash disk supports updating BIOS by M-FLASH.

▸Updating BIOS

1. Insert the USB flash disk that contains the BIOS update file into the computer.
2. Restart the system, and then press "Del" key to enter the BIOS Setup during POST.
3. Enter the M-FLASH menu and then select the "Select one file to update BIOS and ME", and then select the BIOS update file to begin the BIOS update.

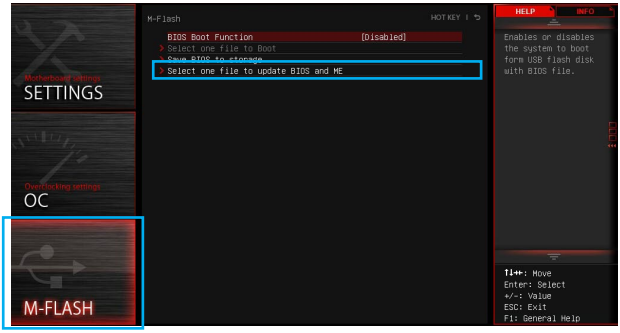

4. After the flashing process is 100% complete, the system will restart.

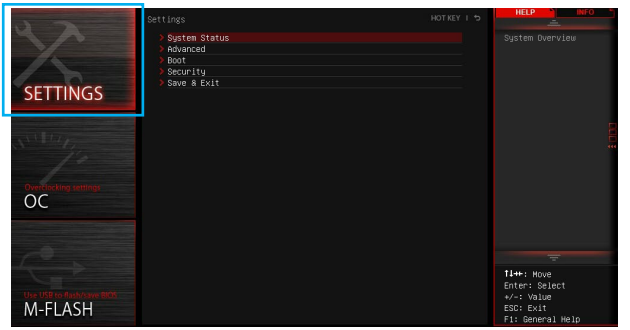

System Status

▸**System Date**

Sets the system date. Use tab key to switch between date elements.

The format is <day> <month> <date> <year>.

<day> Day of the week, from Sun to Sat, determined by BIOS. Read-only.

<month> The month from Jan. through Dec.

<date> The date from 1 to 31 can be keyed by numeric function keys.

<year> The year can be adjusted by users.

▸**System Time**

Sets the system time. Use tab key to switch between time elements.

The time format is <hour> <minute> <second>.

▸**SATA Port**

Show the information of connected SATA device.

Important

If the connected SATA device is not displayed, turn off computer and re-check SATA cable and power cable connections of the device and motherboard.

▸**System Information**

Shows detailed system information, including CPU type, BIOS version, and Memory (read only).

▸**DMI Information**

Shows system information, desktop Board Information and chassis Information. (Read only).

Advanced

▸PCI Subsystem Settings

Sets PCI, PCI express interface protocol and latency timer. Press <Enter> to enter the sub-menu.

▸CPU PCI-E Lane Configuration [Auto]

It can help you conveniently and directly manage the configuration of the PCI-E lanes from CPU.

▸PEG0/ 1/ 2 - Gen X [Auto]

Sets PCI Express protocol for matching different installed devices. PEG0, PEG1, PEG2 are as first, second and third PCIe x16 slots.

[Auto] Enables all PCIe Gen1, Gen2 and Gen3. supports.

[Gen1] Enables PCIe Gen1 support only.

[Gen2] Enables PCIe Gen2 support only.

[Gen3] Enables PCIe Gen3 support only.

▸PCI Latency Timer [32]

Sets latency timer of PCI interface device.

[Options: 32, 64, 96, 128, 160, 192, 224, 248 PCI Bus clocks]

▸ACPI Settings

Sets ACPI parameters of onboard power LED behaviors. Press <Enter> to enter the sub-menu.

▸Power LED [Blinking]

Sets shining behaviors of the onboard Power LED.

[Dual Color] The power LED turns to another color to indicate the S3 state.

[Blinking] The power LED blinks to indicate the S3 state.

▸Integrated Peripherals

Sets integrated peripherals' parameters, such as LAN, HDD, USB and audio. Press <Enter> to enter the sub-menu.

▸Onboard LAN Controller [Enabled]

Enables or disables the onboard LAN controller.

▸LAN Option ROM [Disabled]

Enables or disables the legacy network Boot Option ROM for detailed settings. This item will appear when "Onboard LAN Controller" is enabled.

[Enabled] Enables the onboard LAN Boot ROM.

[Disabled] Disables the onboard LAN Boot ROM.

▸Network Stack [Disabled]

Sets UEFI network stack for optimizing IPv4 / IPv6 function.

[Enabled] Enables UEFI network stack.

[Disabled] Disables UEFI network stack.

▸Ipv4 PXE Support [Enabled]

When “Enabled”, the system UEFI network stack will support Ipv4 protocol. This item will appear when “Network Stack” is enabled.

[Enabled] Enables the Ipv4 PXE boot support.

[Disabled] Disables the Ipv4 PXE boot support.

▸ Ipv6 PXE Support [Enabled]

When “Enabled”, the system UEFI network stack will support Ipv6 protocol. This item will appear when “Network Stack” is enabled.

[Enabled] Enables the Ipv6 PXE boot support.

[Disabled] Disables the Ipv6 PXE boot support.

▸ SATA Mode [AHCI Mode]

Sets the operation mode of the onboard SATA controller.

[Disabled] Disables the SATA function.

[IDE Mode] Specify the IDE mode for SATA storage devices.

[AHCI Mode] Specify the AHCI mode for SATA storage devices. AHCI (Advanced Host Controller Interface) offers some advanced features to enhance the speed and performance of SATA storage device, such as Native Command Queuing (NCQ) and hot-plugging.

[RAID Mode] Enables RAID function for SATA storage devices.

▸ SATAXX Hot Plug [Disabled]

Allows user to enable or disable the SATA hot plug support. This item will appear when the “SATA Mode” set to [AHCI]/ [RAID].

[Enabled] Enables hot plug support for the SATA ports.

[Disabled] Disables hot plug support for the SATA ports.

▸ External SATA 6Gb/s Controller Mode [AHCI]

Sets the operation mode of the external SATA controller.

[Disabled] Disables the SATA function.

[IDE] Specify the IDE mode for SATA storage devices.

[AHCI] Specify the AHCI mode for SATA storage devices. AHCI (Advanced Host Controller Interface) offers some advanced features to enhance the speed and performance of SATA storage device, such as Native Command Queuing (NCQ) and hot-plugging.

▸ HD Audio Controller [Enabled]

Enables or disables the onboard High Definition Audio controller.

▸ HPET [Enabled]

Enables or disables the HPET (High Precision Event Timers) support.

▸ Integrated Graphics Configuration

Adjusts integrated graphics settings for optimum system. Press <Enter> to enter the sub-menu.

▸ Initiate Graphic Adapter [PEG]

Selects a graphics device as the primary boot device.

[IGD] Integrated Graphics Display.

[PEG] PCI-Express Graphics Device.

▸ Integrated Graphics Share Memory [default]

Selects a fixed amount of system memory allocated to the onboard graphics. This item defines the exact memory size shared to the onboard graphics. [Options: 32M, 64M, 128M, 256M, 512M, 1024M]

▸IGD Multi-Monitor [Disabled]

Enables or disables the multi-screen output from integrated graphics and external graphics card.

[Enabled] Enables IGD multi-screen function.

[Disabled] Disables IGD multi-screen function.

▸Intel(R) Rapid Start Technology

Sets Intel® Rapid Start Technology for optimizing the system resume operation. Press <Enter> to enter the sub-menu.

▸Intel(R) Rapid Start Technology [Disabled]

Intel® Rapid Start Technology lets the system resume from sleep mode quickly. This function is available when an SSD is installed.

[Enabled] Enables Intel Rapid Start Technology.

[Disabled] Disables Intel Rapid Start Technology.

▸Entry on S3 RTC Wake [Enabled]

Enables or disables to support S3 RTC wake up with Intel Rapid Start Technology. This item will appear when “Intel(R) Rapid Start Technology” is enabled.

[Enabled] Allows the system to enter the sleep mode with Intel Rapid Start Technology.

[Disabled] Disables this function.

▸Entry After [10 minutes]

Sets a timer for system to enter the sleep mode with Intel Rapid Start Technology. This item will appear when “Intel(R) Rapid Start Technology” is enabled. [Options: 1 minute ~ 120 minutes]

▸Active Page Threshold Support [Enabled]

Enables or disables to support Active Page Threshold when the Rapid Start partition size is less than the system DRAM size.

[Enabled] Enables the additional partition size of SSD for iRST.

[Disabled] Disables this function.

▸Active Memory Threshold

Sets Rapid Start partition size for Active Page Threshold. This item will appear when “Active Page Threshold Support” is enabled.

Important

The partition size must be larger then the amount of memory.

▸Hybrid Hard Disk Support [Disabled]

Enables or disables the Intel Rapid Start Technology to support hybrid hard disk drive.

[Enabled] Enables hybrid hard disk support.

[Disabled] Disables hybrid hard disk support.

▸RapidStart Display Save/Restore [Enabled]

Enables or disables the Intel Rapid Start Display screen to be saved or restored. The screen will be saved before the system enters sleep mode. Then the system will restore the screen when wakened.

[Enabled] Enables this function.

[Disabled] Disables this function.

▸ **RapidStart Display Type [BIOS Save/Restore]**

Selects the screen type of Intel Rapid Start Display.

[BIOS Save/Restore] The BIOS POST splash screen will be saved/ restored.

[DeskTop Save/Restore] The desktop image will be saved/ restored.

▸ **LakeTiny Feature [Disabled]**

Enables or disables Intel Lake Tiny feature with iRST for SSD. This item appears when a installed CPU supports this function and "Intel C-State" is enabled.

[Enabled] Enhance the dynamic IO load adjusted performance for accelerating the SSD speed.

[Disabled] Disables this feature.

▸ **USB Configuration**

Sets the onboard USB controller and device function. Press <Enter> to enter the sub-menu.

▸ **USB Controller [Enabled]**

Enables or disables all USB controller.

▸ **External USB Power Control [Enabled]**

Enables or disables independent USB power for the USB ports under the LAN port. An independent USB power can provide the best audio quality for external USB DACs.

▸ **XHCI Hand-off [Enabled]**

Enables or disables XHCI hand-off support for the operating system without XHCI hand-off feature.

▸ **EHCI Hand-off [Enabled]**

Enables or disables EHCI hand-off support for the operating system without EHCI hand-off feature.

▸ **Legacy USB Support [Enabled]**

Sets Legacy USB function support.

[Auto] The system will automatically detect if any USB device is connected and enables or disables the legacy USB support.

[Enabled] Enable the USB support for legacy operating systems that do not support USB.

[Disabled] The USB devices are available only for UEFI applications.

▸ **Intel(R) Smart Connect Configuration**

Sets Intel Smart Connect Technology for optimizing system network performance in sleep mode. Press <Enter> to enter the sub-menu.

▸ **Intel(R) Smart Connect Technology [Enabled]**

Enables or disables Intel(R) Smart Connect Technology. This feature can update applications (ex. email and social networks) by periodically waking your system from sleep mode. And you do not need to wait for the applications to update when you wake up the system.

[Enabled] Enables Intel smart connect technology.

[Disabled] Disables Intel smart connect technology.

▸ **Power Management Setup**

Sets system Power Management of EuP2013 and AC Power Loss behaviors. Press <Enter> to enter the sub-menu.

▸ **EuP 2013 [Disabled]**

Enables or disables the system power consumption according to EuP2013 regulation.

[Enabled] Optimize the system power consumption according to EuP 2013 regulation.

[Disabled] Disables this function.

Note: When enabled, the system will not support S4 & S5 wake up by USB, PCI and PCIe devices.

▸ **Restore after AC Power Loss [Power Off]**

Sets the system behaviors while encountering the AC power loss.

[Power Off] Leaves the system in power off state after restoring AC power.

[Power On] Boot up the system after restoring AC power.

[Last State] Restores the system to the previous state (power on/ power off) before AC power loss.

▸ **On board Function LED Control [On]**

Enables or disables the onboard function LEDs.

[On] Enables onboard function LEDs.

[Off] Disables onboard function LEDs.

▸ **Windows 8/ 8.1 Configuration**

Sets Windows 8/ 8.1 detailed configuration and behaviors. Press <Enter> to enter the sub-menu.

▸ **Windows 8/ 8.1 Feature [Disabled]**

Enables the supports for Windows 8 or disables for other operating systems. Before enabling this item, make sure all installed devices & utilities (hardware & software) should meet the Windows 8 requirements.

[Enabled] The system will switch to UEFI mode to meet the Windows 8 requirement.

[Disabled] Disables this function.

▸ **MSI Fast Boot [Disabled]**

MSI Fast Boot is the fastest way to boot the system. It will disable more devices to speed up system boot time which is faster than the boot time of “Fast Boot”.

[Enabled] Enables the MSI Fast Boot function to speed up booting time. And the following "Fast Boot" will be disabled and fixed.

[Disabled] Disables MSI Fast Boot.

▸ **Fast Boot [Disabled]**

Enables or disables the Windows 8 fast boot feature. This item will only be available when "MSI Fast Boot" is disabled.

[Enabled] Enables the Fast Boot configuration to accelerate system boot time.

[Disabled] Disables the Fast Boot configuration.

Important

If you want to enter BIOS with enabled “MSI Fast Boot” mode or enabled "Fast Boot" mode, you have to click the "GO2BIOS" tab on MSI Fast Boot utility screen or press the "GO2BIOS" button (optional) on the motherboard. And then the system will enter to BIOS setup directly at next boot.

▸Internal GOP Configuration

Manages the onboard Graphics Output Protocol (GOP). Press <Enter> to enter the sub-menu. This menu shows the iGFX Driver version for system information management. This sub-menu will appear when “Windows 8 Feature” is enabled.

▸Secure Boot

Sets the Windows secure boot to prevent the unauthorized accessing. Press <Enter> to enter the sub-menu. This sub-menu will appear when “Windows 8 Feature” is enabled.

▸Secure Boot Support [Disabled]

Enables or disables secure boot support.

[Enabled] Enables the secure boot function and allow you to set the secure boot settings.

[Disabled] Disables this function.

▸Secure Boot Mode [Standard]

Selects the secure boot mode. This item is to select how the secure boot keys be loaded. This item appears when "Secure Boot" is enabled.

[Standard] The system will automatically load the secure keys from BIOS.

[Custom] Allows user to configure the secure boot settings and manually load the secure keys.

▸Key Management

Manages the secure boot keys. Press <Enter> to enter the sub-menu. This sub-menu will appear when “Secure Boot Mode” sets to [Custom].

▸Wake Up Event Setup

Sets system wake up behaviors for different sleep modes. Press <Enter> to enter the sub-menu.

▸Wake Up Event By [BIOS]

Selects the wake up event by BIOS or operating system.

[BIOS] Activates the following items, and use these items to set the wake up events.

[OS] The wake up events will be defined by OS.

▸Resume By RTC Alarm [Disabled]

Disables or enables the system wake up by RTC Alarm.

[Enabled] Enables the system to boot up on a scheduled time/ date.

[Disabled] Disables this function.

▸Date (of month) Alarm/ Time (hh:mm:ss) Alarm

Sets RTC alarm date/ Time. If Resume By RTC Alarm is set to [Enabled], the system will automatically resume (boot up) on a specified date/hour/minute/second in these fields (using the <+> and <-> to select the date & time settings).

▸Resume By PCI-E Device [Disabled]

Disables or enables the system wake up by PCI express device.

[Enabled] Enables the system to be awakened from the power saving modes when activity or input signal of PCIe device is detected. Note: enables this Item to support “Resume from S3 by USB Device” with third party USB 3.0 port.

[Disabled] Disables this function.

▸ Resume By Onboard LAN [Disabled]

Disables or enables the system wake up by Onboard LAN.

[Enabled] Enables the system to be awakened from the power saving modes when activity or input signal of LAN device is detected.

[Disabled] Disables this function.

▸ Resume By USB Device [Disabled]

Disables or enables the system wake up by USB devices.

[Enabled] Enables the system to be awakened from sleep state when activity of USB device is detected.

[Disabled] Disables this function.

▸ Resume From S3/S4/S5 by PS/2 Mouse [Disabled]

Disables or enables the system wake up by PS/2 mouse.

[Enabled] Enables the system to be awakened from S3/ S4/ S5 state when activity of PS/2 mouse is detected.

[Disabled] Disables this function.

▸ Resume From S3/S4/S5 by PS/2 Keyboard [Disabled]

Disables or enables the system wake up by PS/2 keyboard.

[Any Key] Enables the system to be awakened from S3/ S4/ S5 state when activity of any key on PS/2 keyboard is detected.

[Hot Key] Enables the system to be awakened from S3/ S4/ S5 state when activity of hot key on PS/2 keyboard is detected.

[Disabled] Disables this function.

Boot

Sets the sequence of system boot devices.

▸ Full Screen Logo Display [Enabled]

Enables or disables to show the full screen logo while system POST.

[Enabled] The OS boots straight to the GUI without showing the POST screen.

[Disabled] Shows the POST messages at booting.

▸ GO2BIOS [Disabled]

Enables or disables the system to power on and go to the BIOS setup directly by long pressing the power button about 4 seconds when the system is off.

[Enabled] The system boots straight to the BIOS setup by long pressing the power button about 2~4 seconds when the system is off.

[Disabled] Disables this function.

▸ Boot Mode Select [LEGACY+UEFI]

Sets the system boot mode from legacy or UEFI architecture depending on OS installation requirement. This item will become unselectable and will be configured automatically by BIOS when “Windows 8/ 8.1 Feature” is enabled.

[UEFI] Enables UEFI BIOS boot mode support only.

[LEGACY+UEFI] Enables both Legacy BIOS boot mode and UEFI BIOS boot mode.

▸ FIXED BOOT ORDER Priorities

Sets device priority for system boot.

▸ Boot Option #1~N

These items are used to prioritize the installed boot devices.

Security

▸Administrator Password

Sets administrator password for system security. Enters the administrator password if set; user has full rights to change the BIOS items.

▸User Password

Sets User Password for system security. Enters the user password if set; but user might have limited rights to change the BIOS items.



When selecting the Administrator / User Password items, a password box will appear on the screen. Type the password then press <Enter>. The password typed now will replace any previous set password from CMOS memory. You will be prompted to confirm the password. You may also press <Esc> to abort the selection.

To clear a set password, press <Enter> when you are prompted to enter a new password. A message will confirm the password is being disabled. Once the password is disabled, you can enter the setup and OS without authorization.

▸Trusted Computing

Sets TPM (Trusted Platform Module) function.

▸TPM SUPPORT [Disabled]

Enables or disables the TPM function to build the endorsement key for accessing the system.

▸Chassis Intrusion Configuration

Press <Enter> to enter the sub-menu.

▸Chassis Intrusion [Disabled]

This function will be available if the chassis equips a chassis intrusion switch. Once the chassis is opened, the system will record and issue a warning message. To clear the warning message, set the item to [Reset], then it will return to [Enabled] later. [Options: Disabled, Enabled, Reset]

Save & Exit

▸Discard Changes and Exit

Exit BIOS setup without saving any change. This it is used to abandon all changes and exit BIOS setup.

▸Save Changes and Reboot

This item is used to save all changes and reboot the system.

▸Save Changes

This item is used to save current changes.

▸Discard Changes

This item is used to discard current all changes and restore to the previous values.

▸Restore Defaults

This item is used to restore/ load all default values by the BIOS vendor.

▸Boot Override

The installed boot-able devices will appear on this menu, you can select one of them be a boot device to start booting.

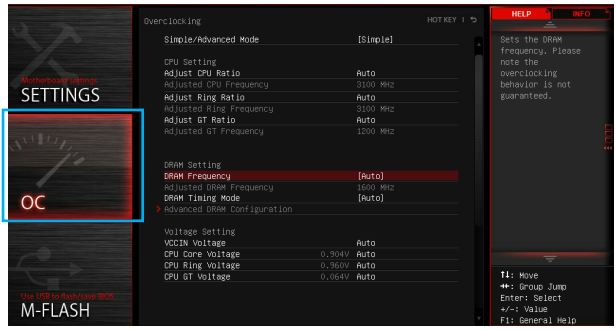

Important

- *Overclocking your PC manually is only recommended for advanced users.*
- *Overclocking is not guaranteed, and if done improperly, can void your warranty or severely damage your hardware.*
- *If you are unfamiliar with overclocking, we advise you to use OC Genie for easy overclocking.*

▸Simple/Advanced Mode [Simple]

Enables or disables the advanced OC settings in BIOS.

[Simple] Provides the regular OC settings in BIOS setup.

[Advanced] Provides the advanced OC settings for experienced users to configure in BIOS setup.

Note: We use * as the symbol for the OC settings of Advanced mode.

< CPU Setting >

▸Adjust CPU Ratio [Auto]

Sets the CPU ratio that is used to determine CPU clock speed. This item can only be changed if the processor supports this function.

▸Adjusted CPU Frequency

Shows the adjusted CPU frequency. Read-only.

▸EIST [Enabled]*

Enables or disables the Enhanced Intel® SpeedStep Technology. This item will be available when "Adjust CPU Ratio" is set to [Auto].

[Enabled] Enables the EIST to adjust CPU voltage and core frequency dynamically. It can decrease average power consumption and average heat production.

[Disabled] Disables EIST.

▸OC Genie Function Control [By Onboard Button]

Enables the OC Genie function by virtual button in BIOS or physical button on motherboard. Enabling OC Genie function can automatically overclock the system with MSI optimized overclocking profile.

[By BIOS Options] OC Genie function is enabled by clicking the virtual OC Genie button at the top left corner of BIOS setup screen.

[By Onboard Button] OC Genie function is enabled by pressing the physical OC Genie button on the motherboard.



- *We recommend that you do not to make any modification in OC menu and do not to load defaults after enabling the OC Genie function.*
- *Updating BIOS or clearing CMOS is not allowed in OC Genie mode, and it may cause OC Genie function fail or other effect.*

▸Adjust Ring Ratio [Auto]

Sets the ring ratio. The valid value range depends on the installed CPU.

▸Adjusted Ring Frequency

Shows the adjusted Ring frequency. Read-only.

▸Adjust GT Ratio [Auto]

Sets the integrated graphics ratio. The valid value range depends on the installed CPU.

▸Adjusted GT Frequency

Shows the adjusted integrated graphics frequency. Read-only.

< CPU BCLK Setting >

▸CPU Base Clock (MHz) [Default]

Sets the CPU Base clock. You may overclock the CPU by adjusting this value. Please note that overclocking behavior and stability is not guaranteed. This item appears when the installed processor supports this function.

< DRAM Setting >

▸DRAM Frequency [Auto]

Sets the DRAM frequency. Please note the overclocking behavior is not guaranteed.

▸Adjusted DRAM Frequency

Shows the adjusted DRAM frequency. Read-only.

▸Extreme Memory Profile (X.M.P) [Disabled]

X.M.P. (Extreme Memory Profile) is the overclocking technology by memory module. This item will be available when you install the memory modules that support X.M.P. technology.

[Disabled] Disables this function.

[Profile 1] Uses profile1 over-clocking settings of installed XMP memory module.

[Profile 2] Uses profile2 over-clocking settings of installed XMP memory module.

▸Memory Try It ! [Disabled]

Memory Try It! works for improving memory compatibility or performance by choosing optimized memory preset.

▸DRAM Timing Mode [Auto]

Selects the memory timing mode.

[Auto]	DRAM timings will be determined based on SPD (Serial Presence Detect) of installed memory modules.
[Link]	Allows user to configure the DRAM timing manually for all memory channel.
[UnLink]	Allows user to configure the DRAM timing manually for respective memory channel.

▸Advanced DRAM Configuration

Press <Enter> to enter the sub-menu. This sub-menu will be activated after setting [Link] or [Unlink] in “DRAM Timing Mode”. User can set the memory timing for each memory channel. The system may become unstable or unbootable after changing memory timing. If it occurs, please clear the CMOS data and restore the default settings. (Refer to the Clear CMOS jumper/ button section to clear the CMOS data, and enter the BIOS to load the default settings.)

▸DRAM Training Configuration*

Press <Enter> to enter the sub-menu. Enables or disables the various training ways of DRAM. The system may become unstable or unbootable after changing these items in this sub-menu. If it occurs, please clear the CMOS data and restore the default settings. (Refer to the Clear CMOS jumper/ button section to clear the CMOS data, and enter the BIOS to load the default settings.)

▸Memory Fast Boot [Auto]

Enables or disables the initiation and training for memory every booting.

[Auto]	This setting will be configured automatically by BIOS.
[Enabled]	Memory will completely imitate the archive of first initiation and first training. After that, the memory will not be initialed and trained when booting to accelerate the system booting time.
[Disabled]	The memory will be initialed and trained every booting.

< Voltage Setting >

▸DigitALL Power

Press <Enter> to enter the sub-menu. Controls the digital powers related to CPU PWM.

▸VR 12VIN OCP Expander [Auto]

Expands the limitation of VR Over Current Protection with 12V input voltage. The higher expanding value indicates less protection. Therefore, please adjust the current carefully if needed, or it may damage the CPU/ VR MOS. If set to "Auto", BIOS will configure this setting automatically.

▸CPU Phase Control [Auto]

Controls PWM phase proportionally to the CPU loading. If set to "Auto", BIOS will optimize the CPU PWM phase automatically.

[Auto] This setting will be configured automatically by BIOS.

[Normal] Sets the normal power phase profile for CPU, it could provide a stable system proformance and effective power-saving capability.

[Optimized] Sets the optimum power phase profile for CPU, it could provide the system with an optimum power-saving capability.

[Disabled] Disables the PWM power phase switching feature.

▸CPU Vdroop Offset Control [Auto]

Sets a percentage of offset voltage for CPU vdroop. If set to "Auto", BIOS will configure this setting automatically.

▸CPU Over Voltage Protection [Auto]

Sets the voltage limit for CPU over-voltage protection. If set to "Auto", BIOS will configure this setting automatically. Higher voltage provides less protection and may damage the system.

▸CPU Under Voltage Protection [Auto]

Sets the voltage limit for CPU under-voltage protection. If set to "Auto", BIOS will configure this setting automatically. Higher voltage provides less protection and may damage the system.

▸CPU Over Current Protection [Auto]

Sets the current limit for CPU over-current protection. If set to "Auto", BIOS will configure this setting automatically. Higher voltage provides less protection and may damage the system.

▸CPU Switching Frequency [Auto]

Sets the PWM working speed to stabilize CPU Core voltage and minimize ripple range. Increasing the PWM working speed will cause higher temperature of MOSFET. So please make sure a cooling solution is well-prepared for MOSFET before you increase the value. If set to "Auto", BIOS will configure this setting automatically.

▸CPU VRM Over Temperature Protection [Enabled]

Enables or disables the CPU VRM over-temperature protection.

[Enabled] Sets the temperature limit on CPU VRM for over-temperature protection. The CPU frequency may be throttled when CPU VRM over the specified temperature.

[Disabled] Disables this function.

▸DRAM Phase Control [Auto]

Controls PWM phase proportionally to the DRAM loading. If set to "Auto", BIOS will optimize the DRAM PWM phase automatically.

[Auto] This setting will be configured automatically by BIOS.

[Disabled] Disables the PWM power phase switching feature.

▸DRAM Switching Frequency [Auto]

Sets the PWM working speed to stabilize DRAM voltage and minimize ripple range. If set to "Auto", BIOS will configure this setting automatically.

▸VCCIN Voltage [Auto]

Sets the CPU input voltage. The CPU input voltage is the CPU power source that is shared with components of the CPU.

▸CPU Core/Ring/GT Voltage Mode [Auto]*

Selects the control mode for CPU Core/ Ring/ GT voltages.

[Auto]	This setting will be configured automatically by BIOS.
[Adaptive Mode]	Sets the adaptive voltage automatically for optimizing the system performance.
[Override Mode]	Allows you to set the voltage manually.
[Offset Mode]	Allows you to set the offset voltage and select the voltage offset mode.
[Adaptive + Offset]	Sets the adaptive voltage automatically and allows you to set the offset voltage.
[Override + Offset]	Allows you to set the voltage and the offset voltage manually.

▸CPU Core Voltage/ CPU Ring Voltage/ CPU GT Voltage [Auto]

Sets the CPU Core/ Ring/ GT voltages. If set to "Auto", BIOS will set these voltages automatically or you can set it manually. This item appears when "CPU Core/Ring/GT Voltage Mode" sets to [Auto]/ [Adaptive Mode]/ [Override Mode].

▸CPU Core/ Ring/ GT Voltage Offset Mode [Auto]*

Selects the offset mode for CPU Core/ Ring/ GT voltage. This item appears when "CPU Core/Ring/GT Voltage Mode" sets to [Offset Mode]/ [Adaptive + Offset]/ [Override + Offset].

[Auto]	This setting will be configured automatically by BIOS.
[+]	Allows you to offset the voltage by positive value mode.
[-]	Allows you to offset the voltage by negative value mode.

▸CPU Core/ Ring/ GT Voltage Offset [Auto]

Sets the offset value for CPU Core/ Ring/ GT voltage. If set to "Auto", BIOS will set these voltages automatically or you can set it manually. This item appears when "CPU Core/Ring/GT Voltage Mode" sets to [Offset Mode]/ [Adaptive + Offset]/ [Override + Offset].

▸CPU SA/IOA/IOD Voltage Mode [Manual Mode]*

Selects the control mode for CPU SA/ IOA (IO Analog)/ IOD (IO Digital) voltages.

[Manual]	Allows you to set the voltage manually.
[Offset]	Allows you to set the offset voltage and select the voltage offset mode.

▸CPU SA/ IO Analog/ IO Digital Voltage Offset Mode [Auto]*

Selects the offset mode for CPU SA/ IO Analog/ IO Digital voltage. This item appears when "CPU SA/IOA/IOD Voltage Mode" sets to [Offset Mode].

[Auto]	This setting will be configured automatically by BIOS.
[+]	Allows you to offset the voltage by positive value mode.
[-]	Allows you to offset the voltage by negative value mode.

▸CPU SA/ IO Analog/ IO Digital Voltage Offset [Auto]*

Sets the offset value for CPU SA/ IO Analog/ IO Digital voltage. If set to "Auto", BIOS will set these voltages automatically or you can set it manually. This item appears when "CPU SA/IOA/IOD Voltage Mode" sets to [Offset Mode].

▸CPU SA/ IO Analog/ IO Digital Voltage Offset [Auto]*

Sets the offset value for CPU SA/ IO Analog/ IO Digital voltage. If set to "Auto", BIOS will set these voltages automatically or you can set it manually. This item appears when "CPU SA/IOA/IOD Voltage Mode" sets to [Offset Mode].

▸XXX Voltage [Auto]* (optional)

Sets the voltages related to memory/ PCH. If set to "Auto", BIOS will set the voltage automatically or you can set it manually.

< Other Setting >

▸CPU Memory Changed Detect [Enabled]*

Enables or disables the system to issue a warning message during boot when the CPU or memory has been replaced.

[Enabled] The system will issue a warning message during boot and than needs to load the default settings for new devices.

[Disabled] Disables this function and keeps the current BIOS settings.

▸CPU Specifications

Press <Enter> to enter the sub-menu. This sub-menu displays the information of installed CPU. You can also access this information menu at any time by pressing [F4]. Read only.

▸CPU Technology Support

Press <Enter> to enter the sub-menu. The sub-menu shows what the key features does the installed CPU support. Read only.

▸MEMORY-Z

Press <Enter> to enter the sub-menu. This sub-menu displays all the settings and timings of installed memory. You can also access this information menu at any time by pressing [F5].

▸DIMMXX Memory SPD

Press <Enter> to enter the sub-menu. The sub-menu displays the information of installed memory. Read only.

▸CPU Features

Press <Enter> to enter the sub-menu.

▸Hyper-Threading Technology [Enabled]

The processor uses Hyper-Threading technology to increase transaction rates and reduces end-user response times. Intel Hyper-Threading technology treats the multi cores inside the processor as multi logical processors that can execute instructions simultaneously. In this way, the system performance is highly improved. This item appears when the installed CPU supports this setting.

[Enable] Enables Intel Hyper-Threading technology.

[Disabled] Disables this item if the system does not support HT function.

▸Active Processor Cores [All]

This item allows you to select the number of active processor cores.

▸ **Limit CPUID Maximum [Disabled]**

Enables or disables the extended CPUID value.

[Enabled] BIOS will limit the maximum CPUID input value to circumvent boot problems with older operating system that do not support the processor with extended CPUID value.

[Disabled] Use the actual maximum CPUID input value.

▸ **Execute Disable Bit [Enabled]**

Intel's Execute Disable Bit functionality can prevent certain classes of malicious "buffer overflow" attacks where worms attempt to execute code to damage the system. It is recommended that keeps this item enabled always.

[Enabled] Enables NO-Execution protection to prevent the malicious attacks and worms.

[Disabled] Disables this function.

▸ **Intel Virtualization Tech [Enabled]**

Enables or disables Intel Virtualization technology.

[Enabled] Enables Intel Virtualization technology and allows a platform to run multiple operating systems in independent partitions. The system can function as multiple systems virtually.

[Disabled] Disables this function.

▸ **Hardware Prefetcher [Enabled]**

Enables or disables the hardware prefetcher (MLC Streamer prefetcher).

[Enabled] Allows the hardware prefetcher to automatically pre-fetch data and instructions into L2 cache from memory for tuning the CPU performance.

[Disabled] Disables the hardware prefetcher.

▸ **Adjacent Cache Line Prefetch [Enabled]**

Enables or disables the CPU hardware prefetcher (MLC Spatial prefetcher).

[Enabled] Enables adjacent cache line prefetching for reducing the cache latency time and tuning the performance to the specific application.

[Disabled] Enables the requested cache line only.

▸ **CPU AES Instructions [Enabled]**

Enables or disables the CPU AES (Advanced Encryption Standard-New Instructions) support. This item appears when a CPU supports this function.

[Enabled] Enables Intel AES support.

[Disabled] Disables Intel AES support.

▸ **Intel Adaptive Thermal Monitor [Enabled]**

Enables or disables the Intel adaptive thermal monitor function to protect the CPU from overheating.

[Enabled] Throttles down the CPU core clock speed when the CPU is over the adaptive temperature.

[Disabled] Disables this function.

▸ **Intel C-State [Auto]**

C-state is a processor power management technology defined by ACPI.

[Auto] This setting will be configured automatically by BIOS.

[Enabled] Detects the idle state of system and reduce CPU power consumption accordingly.

[Disabled] Disable this function.

▸ **C1E Support [Disabled]**

Enables or disables the C1E function for power-saving in halt state. This item appears when "Intel C-State" is enabled.

[Enabled] Enables C1E function to reduce the CPU frequency and voltage for power-saving in halt state.

[Disabled] Disables this function.

▸ **Package C State limit [Auto]**

This item allows you to select a CPU C-state mode for power-saving when system is idle. This item appears when "Intel C-State" is enabled.

[Auto] This setting will be configured automatically by BIOS.

[C0~C7s] The power-saving level from high to low is C7s, C7, C6, C3, C2, then C0.

▸ **LakeTiny Feature [Disabled]**

Enables or disables Intel Lake Tiny feature with iRST for SSD. This item appears when a installed CPU supports this function and "Intel C-State" is enabled.

[Enabled] Enhance the dynamic IO load adjusted performance for accelerating the SSD speed.

[Disabled] Disables this feature.

▸ **EIST [Enabled]**

Enables or disables the Enhanced Intel® SpeedStep Technology. This item will appear when "Simple/ Advanced Mode" is set to [Simple].

[Enabled] Enables the EIST to adjust CPU voltage and core frequency dynamically. It can decrease average power consumption and average heat production.

[Disabled] Disables EIST.

▸ **Intel Turbo Boost [Enabled]**

Enables or disables the Intel® Turbo Boost. This item is for Simple mode and appears when the installed CPU supports this function.

[Enabled] Enables this function to boost CPU performance automatically above rated specifications when system request the highest performance state.

[Disabled] Disables this function.

▸ **Long Duration Power Limit (W) [Auto]**

Sets the long duration TDP power limit for CPU in Turbo Boost mode.

▸ **Long Duration Maintained (s) [Auto]**

Sets the maintaining time for "Long duration power Limit(W)".

▸ **Short Duration Power Limit (W) [Auto]**

Sets the short duration TDP power limit for CPU in Turbo Boost mode.

▸ **CPU Current limit (A) [Auto]**

Sets maximum current limit of CPU package in Turbo Boost mode. When the current is over the specified limit value, the CPU will automatically reduce the core frequency for reducing the current.

▸ **Internal VR OVP OCP Protection [Auto]**

Enables or disables the over-voltage protection and over-current protection for CPU internal VR (Voltage Regulator).

[Auto] This setting will be configured automatically by BIOS.

[Enabled] Sets the voltage limit on the CPU internal VR for over-voltage protection and over-current protection.

[Disabled] Disables this function for overclocking.

▸ **Internal VR Efficiency Management [Auto]**

Enables or disables the CPU internal VR efficiency management.

[Auto] This setting will be configured automatically by BIOS.

[Enabled] Enables the VR effciency management for power-saving control.

[Disabled] Disables this function.

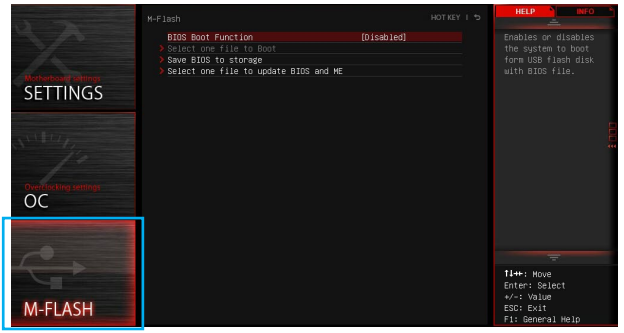

Important

M-Flash funcion allows you to update BIOS from USB flash disk (FAT32/ NTFS format only), or allows the system to boot from the BIOS file inside USB flash disk (FAT/ FAT32 format only).

▸**BIOS Boot Function [Disabled]**

Enables or disables the system to boot form USB flash disk with BIOS file.

[Enabled] Enables the system to boot from the BIOS within USB flash disk.

[Disabled] Enables the system to boot from the BIOS within ROM on motherboard.

*This may cause system unstable, MSI recommend it only for power users.

▸**Select one file to boot**

Selects a BIOS file in the USB flash disk (NTFS/ FAT 32 format) to boot the system. This item will selectable when the “BIOS Boot function” is enabled.

▸**Save BIOS to storage**

Saves the current BIOS file to the USB flash disk. The USB flash disk drive should be in FAT32 format.

▸**Select one file to update BIOS and ME**

Selects a BIOS file, includes the ME management settings, in the USB flash disk (NTFS/ FAT 32 format) to update the BIOS and ME. The system will reboot after updating.

OC PROFILE

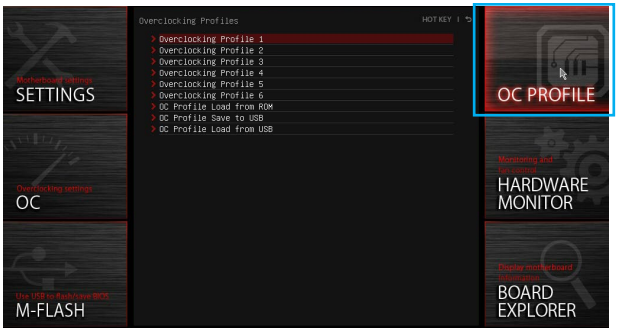

▸**Overclocking Profile 1/ 2/ 3/ 4/ 5/ 6**

Overclocking Profile 1/ 2/ 3/ 4/ 5/ 6 management. Press <Enter> to enter the sub-menu.

▸**Set Name for Overclocking Profile 1/ 2/ 3/ 4/ 5/ 6**

Names the current overclocking profile.

▸**Save Overclocking Profile 1/ 2/ 3/ 4/ 5/ 6**

Saves the current overclocking profile.

▸**Load Overclocking Profile 1/ 2/ 3/ 4/ 5/ 6**

Loads the current overclocking profile.

▸**Clear Overclocking Profile 1/ 2/ 3/ 4/ 5/ 6**

Clears the current overclocking profile.

▸**OC Profile Load from ROM**

Loads OC profile from ROM.

▸**OC Profile Save to USB**

Saves OC profile to the USB flash disk drive. The USB flash disk should be FAT32 format only.

▸**OC Profile Load from USB**

Loads OC profile from the USB flash disk drive. The USB flash disk should be FAT32 format only.

HARDWARE MONITOR

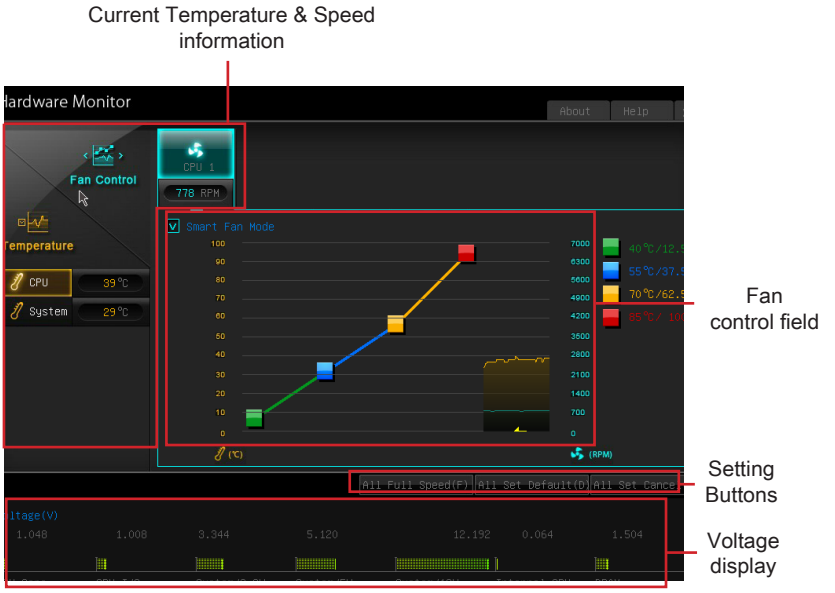

▸**Current Temperature & Speed information**

Shows the current CPU temperature, system temperature and fans' speeds.

▸**Fan control field**

This motherboard provides a fan speed control feature call “Smart Fan Mode”. Please check the “Smart Fan Mode” to enable the Smart Fan Mode. Smart Fan Mode automatically controls fan speed depending on the current CPU temperature and to keep it with a specific operating speed. When the current CPU temperature is over/ under the setting temperature, the CPU/ system fan will run at the corresponding speed. In this field, you can set the CPU/ system fan speed and the target temperatures by moving the square.

Important

The changed settings will become effective after you save the changes and reboot the system.

▸**Function Buttons**

[All Full Speed] Sets all CPU/ system fans to run at full speed.
[All Set Default] Sets all CPU/ system fans to run at default speed.
[All Set Cancel] Discards current all changes and restore to the previous values.

▸**Voltage display**

Shows the current voltages of CPU, system and memory.

Appendix A

Realtek Audio

The Realtek audio provides 10-channel DAC that simultaneously supports 7.1 sound playback and 2 channels of independent stereo sound output (multiple streaming) through the Front-Out-Left and Front-Out-Right channels.

Software Configuration

After installing the audio driver (see Chapter 1 - Driver and Utilities), the “Realtek HD Audio Manager” icon will appear at the notification area (lower right of the screen). You may double click the icon and the GUI will pop up accordingly.

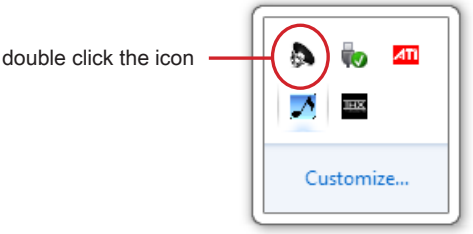

It is also available to enable the audio driver by clicking the **Realtek HD Audio Manager** from the **Control Panel**.

Software panel overview

The following figure describes the function of the Realtek HD Audio Manager panel.



▸Device Selection

Here you can select a audio output source to change the related options. The “check” sign (in orange) indicates the devices as default.

▸Volume Adjustment

You can control the volume or balance the right/left side of the speakers that you plugged in front or rear panel by adjust the bar.

▸Application Enhancement

The array of options will provide you a complete guidance of anticipated sound effect for both output and input device.

▸Jack status panel

This panel depicts all render and capture devices currently connected with your computer.

Auto popup dialog

When you plug into the device at the jack, a dialogue window will pop up asking you which device is current connected.

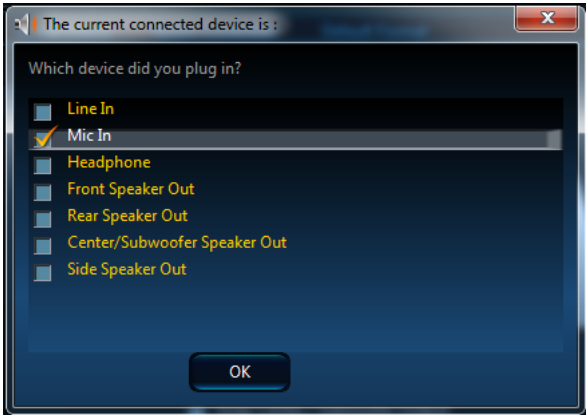

As you know, each jack corresponds to its default setting, you can refer to the next section “Hardware Default Setting”.

Important

The pictures in this appendix are for reference only and may vary from the product you purchased. Please refer to the actual screens of your system for detailed information.

Hardware Default Setting

The following diagrams are audio back panel default setting.

- **Backpanel audio jacks to 2-channel speakers diagram**

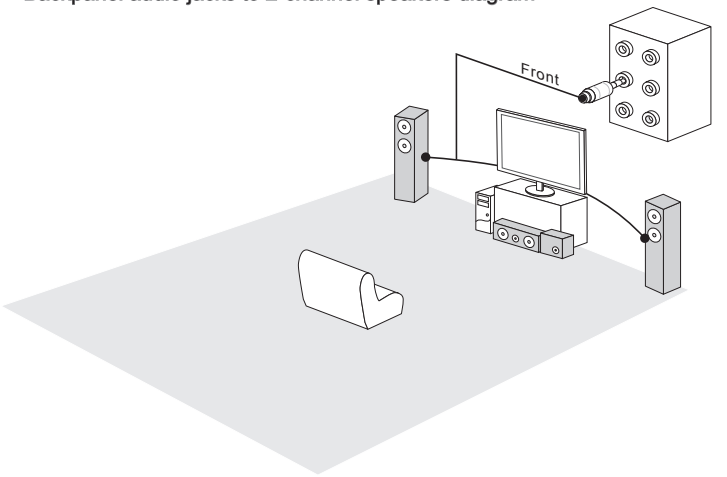

- **Backpanel audio jacks to 4-channel speakers diagram**

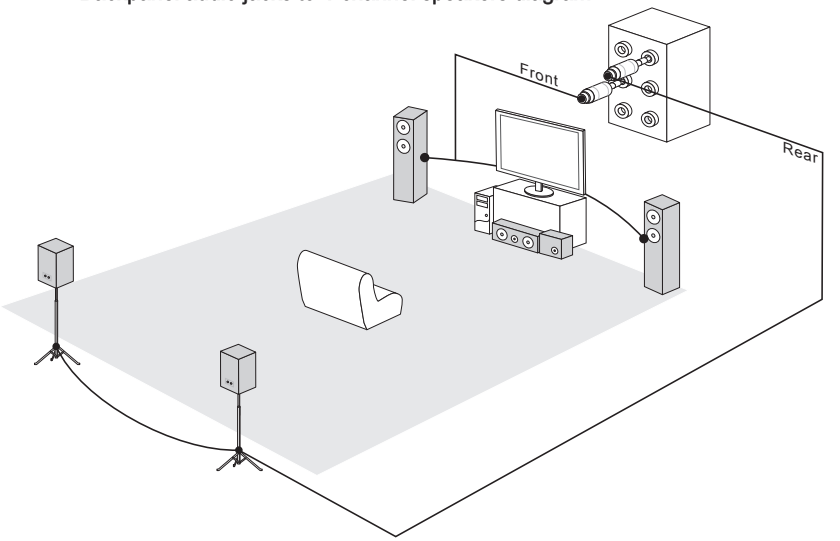

- Backpanel audio jacks to 6-channel speakers diagram

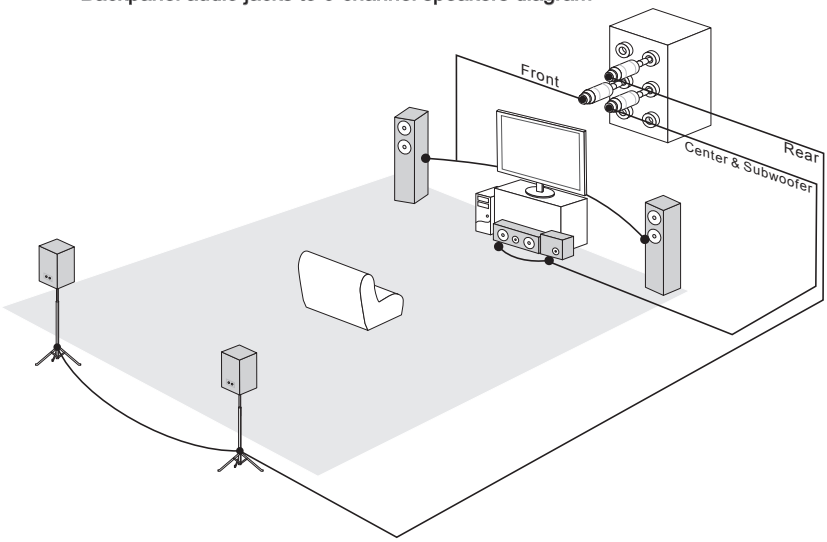

- Backpanel audio jacks to 8-channel speakers diagram

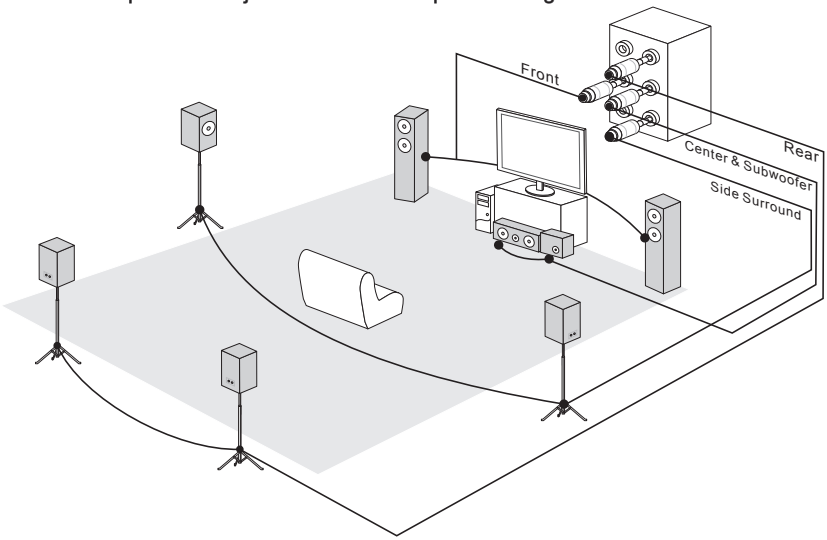

Appendix B

Intel RAID

This appendix will assist users in configuring and enabling RAID functionality and accelerating system on platforms

Introduction

The motherboard comes with the Intel RAID controller that allows you to configure SATA hard drives as RAID sets.

SATA hard drives deliver blistering transfer speeds up to 6 Gb/s. Serial ATA uses long, thin cables, making it easier to connect your drive and improving the airflow inside your PC. The most outstanding features are:

1. Supports 3 Gb/s or 6 Gb/s transfers with CRC error checking.
2. Supports Hot-plug-n-play feature.
3. Data handling optimizations including tagged command queuing, elevator seek and packet chain command.

Intel® RAID controller offers RAID level 0 (Striping), RAID level 1 (Mirroring and Duplexing), RAID level 5 (Block Interleaved Distributed Parity), RAID level 10 (A Stripe of Mirrors) , Intel® Rapid Storage Technology.

RAID 0 breaks the data into blocks which are written to separate hard drives. Spreading the hard drive I/O load across independent channels greatly improves I/O performance.

RAID 1 provides data redundancy by mirroring data between the hard drives and provides enhanced read performance.

RAID 5 Provides data striping at the byte level and also stripe error correction information. This results in excellent performance and good fault tolerance. Level 5 is one of the most popular implementations of RAID.

RAID 10 Not one of the original RAID levels, multiple RAID 1 mirrors are created, and a RAID 0 stripe is created over these.

Intel® Rapid Storage Technology is the advanced ability for two RAID volumes to share the combined space of two hard drives being used in unison.

Intel® Rapid Storage Technology utilizes RAID 1 functionality to copy data from a designated Master drive to a designated Recovery drive. The size of the Master drive must be less than or equal to the size of the Recovery drive. When a Recovery volume is created, complete capacity of the Master drive will be used as the Master volume. Only one Recovery Volume can exist on a system. There are 2 methods of updating the data on the Master to the Recovery drive. They are Continuous Update Policy and On Request Update Policy.

Important

The least number of hard drives for RAID 0, RAID 1, Recovery or Matrix mode is 2. The least number of hard drives for RAID 10 mode is 4. And the least number of hard drives for RAID 5 mode is 3.

All the information/ volumes/ pictures listed in your system might differ from the illustrations in this appendix.

Using Intel Rapid Storage Technology Option ROM

The Intel Rapid Storage Technology Option ROM should be integrated with the system BIOS on all motherboards with a supported Intel chipset. The Intel Rapid Storage Technology Option ROM is the Intel RAID implementation and provides BIOS and DOS disk services. Please use <Ctrl> + <I> keys to enter the "Intel® RAID for Serial ATA" status screen, which should appear early in system boot-up, during the POST (Power-On Self Test). Also, you need to enable the RAID function in BIOS to create, delete and reset RAID volumes.

Creating, Deleting and Resetting RAID Volumes:

The Serial ATA RAID volume may be configured using the RAID Configuration utility stored within the Intel RAID Option ROM. During the Power-On Self Test (POST), the following message will appear for a few seconds.

Important

The "Device Model", "Serial #" and "Size" in the following example might be different from your system.

```
RAID Volumes
None defined.

Physical Disks:
Port   Device Model          Serial #              Size      Type/Status(Vol ID)
1      XXXXXXXXXXXXX         XXXXXXXXXXXXX         XXX.XGB   Non-RAID Disk
2      XXXXXXXXXXXXX         XXXXXXXXXXXXX         XXX.XGB   Non-RAID Disk



Press  <CTRL-I>  to enter Configuration Utility..
```

After the above message shows, press <Ctrl> and <I> keys simultaneously to enter the Intel Rapid Storage Technology Option ROM.

Important

The following procedure is only available with a newly-built system or if you are reinstalling your OS. It should not be used to migrate an existing system to RAID.

After pressing the <Ctrl> and <I> keys simultaneously, the following window will appear:

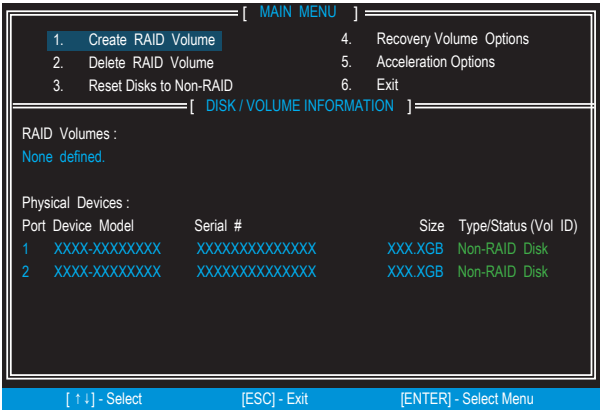

■ **Create RAID Volume**

1. Select option 1 “Create RAID Volume” and press <Enter> key. The following screen appears. Then in the Name field, specify a RAID Volume name and then press the <TAB> or <Enter> key to go to the next field.
2. Use the arrow keys to select the RAID level best suited to your usage model in RAID Level.

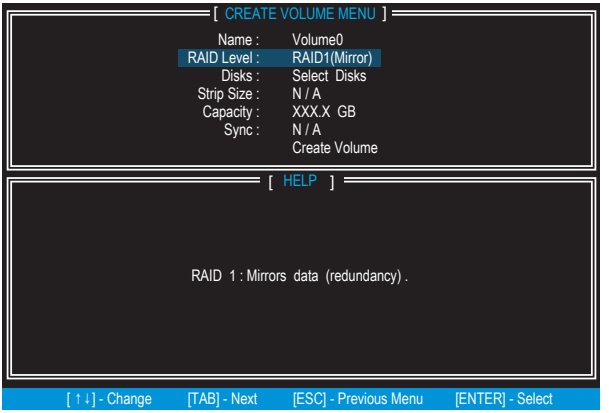

3. In the Disk field, press <Enter> key and use <Space> key to select the disks you want to create for the RAID volume, then click <Enter> key to finish selection. This field will become available according to the selected RAID level.
4. Then select the strip size for the RAID array by using the “upper arrow” or “down arrow” keys to scroll through the available values, and pressing the <Enter> key to select and advance to the next field. The available values range from 4KB to 128 KB in power of 2 increments. The strip size should be chosen based on the planned drive usage. Here are some typical values:
RAID0 -128KB / RAID10 - 64KB / RAID5 - 64KB. This field will become available according to the selected RAID level.
5. Then select the capacity of the volume in the Capacity field. The default value is the maximum volume capacity of the selected disks.

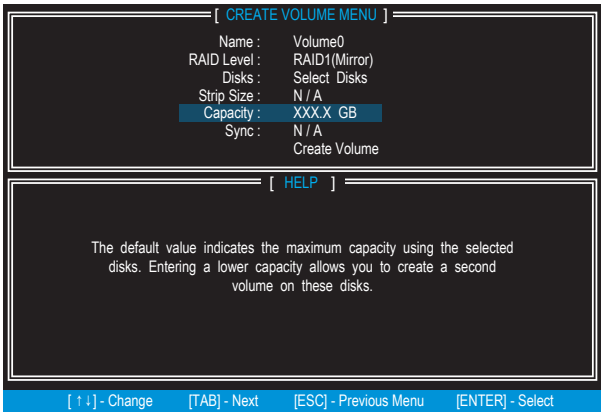

Important

Since you want to create two volumes, this default size (maximum) needs to be reduced. Type in a new size for the first volume. As an example: if you want the first volume to span the first half of the two disks, re-type the size to be half of what is shown by default. The second volume, when created, will automatically span the remainder of two hard drives.

6. Go to the Create Volume field and press <Enter>, the following screen appears for you to confirm if you are sure to create the RAID volume. Press <Y> to continue.

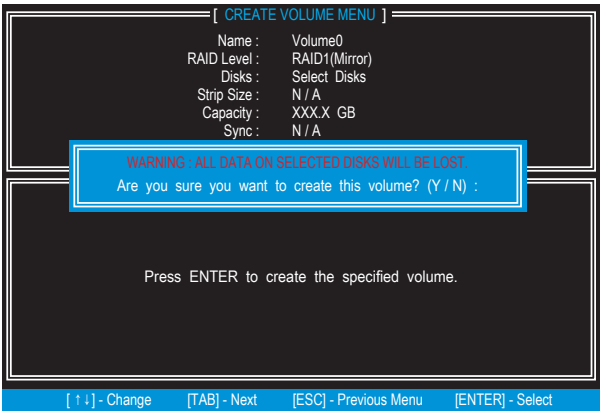

7. Then the following screen appears to indicate that the creation is finished.

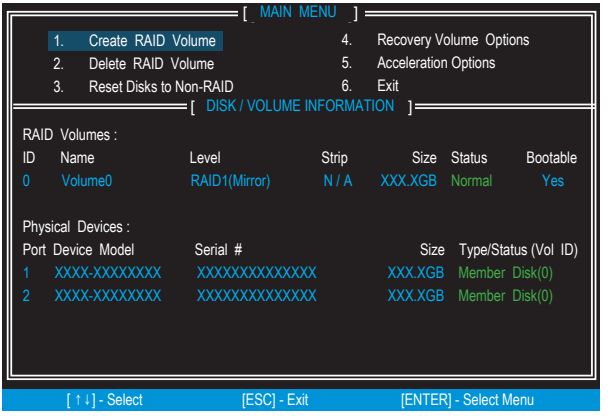

- **Delete RAID Volume**

  Here you can delete the RAID volume, but please be noted that all data on RAID drives will be lost.

Important

If your system currently boots to RAID and you delete the RAID volume in the Intel RAID Option ROM, your system will become un-bootable.

Select option 2 **Delete RAID Volume** from the main menu screen and press <Enter> key to select a RAID volume for deletion. Then press <Delete> key to delete the selected RAID volume. The following screen appears.

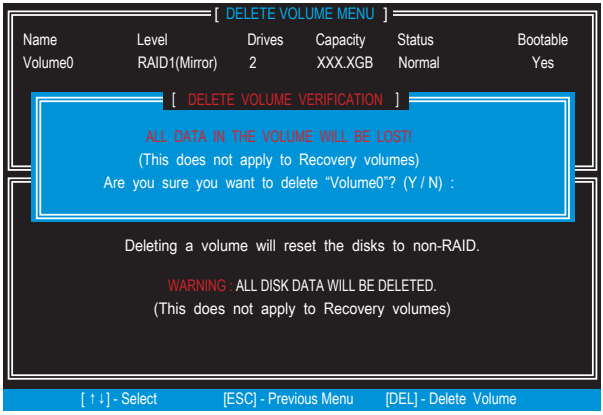

Press <Y> key to accept the volume deletion.

■ **Reset Disks to Non-RAID**

Select option 3 Reset Disks to Non-RAID and press <Enter> to delete the RAID volume and remove any RAID structures from the drives. The following screen appears:

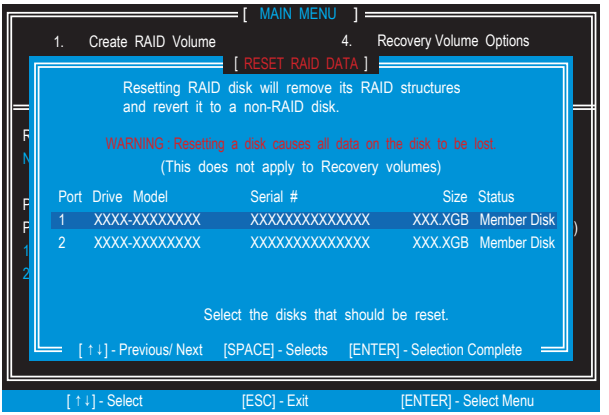

Use the <Space> key to select the disks and press <Enter> key. A confirmation sentence will appear below, and then press <Y> key to accept the selection.

Important

- *You will lose all data on the RAID drives and any internal RAID structures when you perform this operation.*
- *Possible reasons to "Reset Disks to Non-RAID" could include issues such as incompatible RAID configurations or a failed volume or failed disk.*

- **Recovery Volume Options**

  Select option 4 Recovery Volume Options and press <Enter> to change recovery volume mode. The following screen appears:

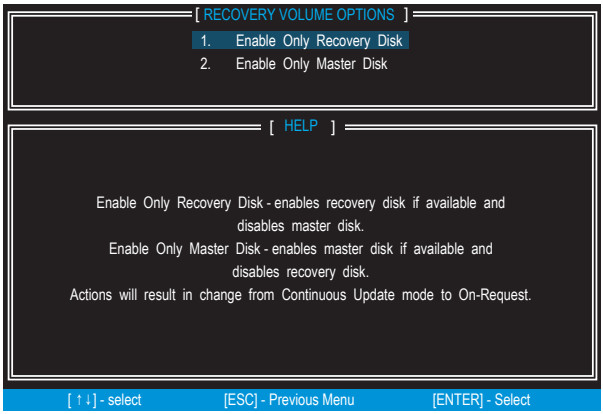

  Recovery mode will change from Continuous Update to On-Request after you enable “Only Recovery Disk” or “Only Master Disk”.

Degraded RAID Array

A RAID 1, RAID 5 or RAID 10 volume is reported as degraded when one of its hard drive members fails or is temporarily disconnected, and data mirroring is lost. As a result, the system can only utilize the remaining functional hard drive member. To re-establish data mirroring and restore data redundancy, refer to the procedure below that corresponds to the current situation.

Missing Hard Drive Member

1. Make sure the system is powered off.
2. Reconnect the hard drive.
3. Reboot the system to Windows; the rebuild will occur automatically.

Failed Hard Drive Member

1. Make sure the system is powered off.
2. Replace the failed hard drive with a new one that is of equal or greater capacity.
3. Reboot the system to Intel RAID Option ROM by press <Ctrl> and <I> keys simultaneously during the Power-On Self Test (POST).

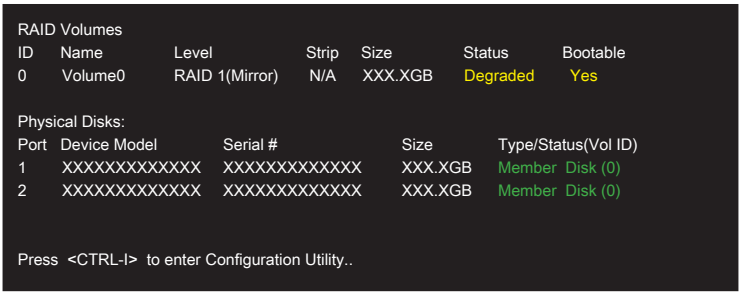

4. Select the port of the destination disk for rebuilding, and then press ENTER.

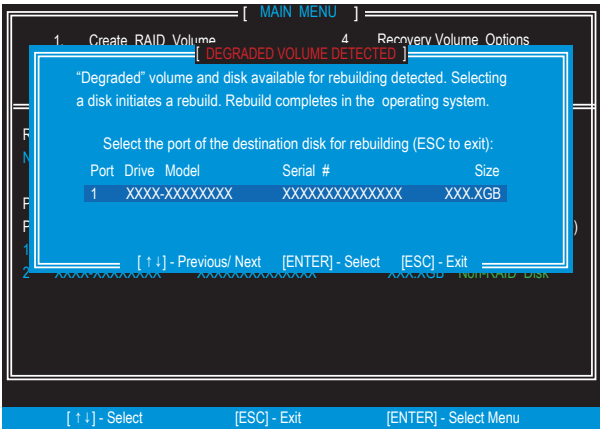

5. Exit Intel RAID Option ROM, and then reboot to Windows system.
6. When prompted to rebuild the RAID volume, click 'Yes'.
7. The Intel Rapid Storage Technology application will be launched. Right-click the new hard drive and select 'Rebuild to this Disk'. The 'Rebuild Wizard' will be launched which will guide you through the process of rebuilding to the new hard drive.

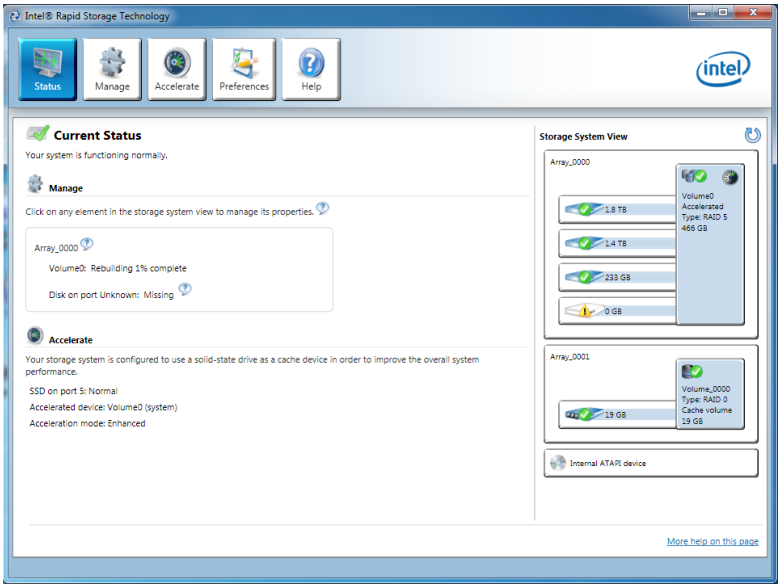

System Acceleration (optional)

Intel® Rapid Storage Technology use a SSD as a cache. Which can store frequently used data without having to use a slow virtual disk or depend on RAM. The SSD cache with the advantages of high-speed read/write and non-volatile memory to accelerate the system performance.

Important

Check your SSD manufacturer's website, upgrade firmware in order to support Intel® Rapid Storage Technology.

Intel® Rapid Storage Technology can only work with RAID mode. Even though there is only one hard drive, you must set the SATA Mode to RAID in BIOS. The OS must be installed in the RAID ready disk in order to use the SSD caching.

Follow these steps to enable system acceleration. If Windows has been installed in RAID mode, skip to the step 5.

1. Reboot and enter the BIOS steup.
2. Set the SATA Mode to RAID in BIOS.
3. Install Windows operating system.
4. Insert the MSI Driver DVD into the DVD-ROM drive.
5. Install Intel RAID driver

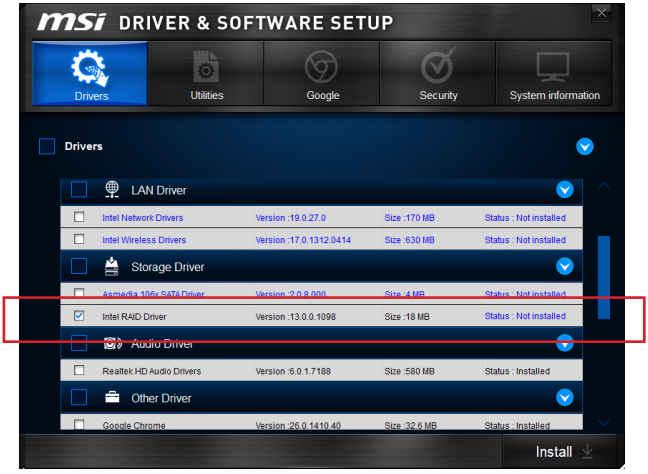

6. Powered off.
7. Connect the SSD.
8. Reboot the system to Windows.

9. Run Intel Rapid Storage Technology application.
10. Click "Enable acceleration" under Accelerate tab.

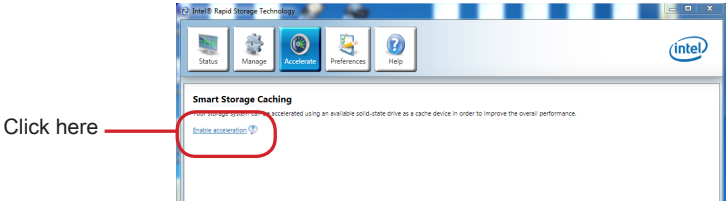

11. Select the acceleration options.

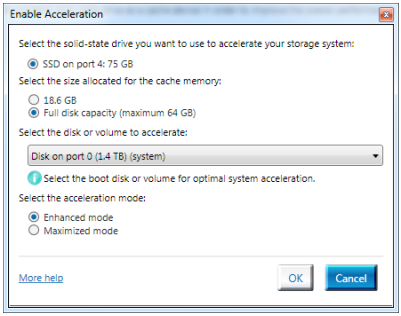

12. Click OK and reboot the system.

The page refreshes and reports the new acceleration configuration in the Acceleration View.

Important

You can click “More help on this page” or "More help" of the Intel® Rapid Storage Technology application to view more information.

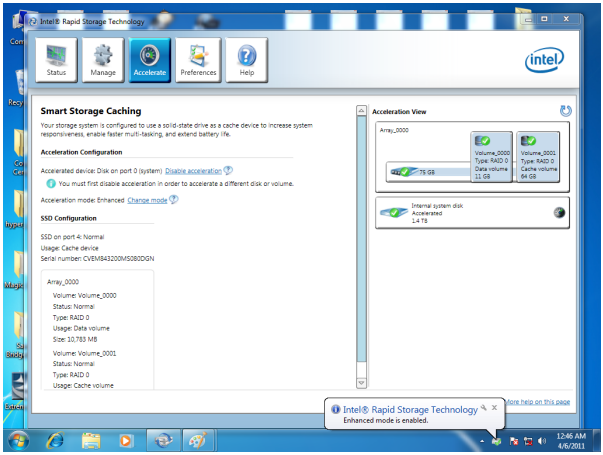

RST Synchronization (optional)

If you are using Maximized mode as the Acceleration mode, the data on the hard disk is not always synchronized with the data in the SSD cache. In some situations, you may want to manually sync the disks for avoiding data loss.

Follow these steps to sync manually.

1. Reboot system, during the Power-On Self Test (POST) press, press <Ctrl> and <I> keys simultaneously to enter the Intel Rapid Storage Technology Option ROM.
2. Select option 5 “Acceleration Options” and press <Enter> key. The following screen appears.

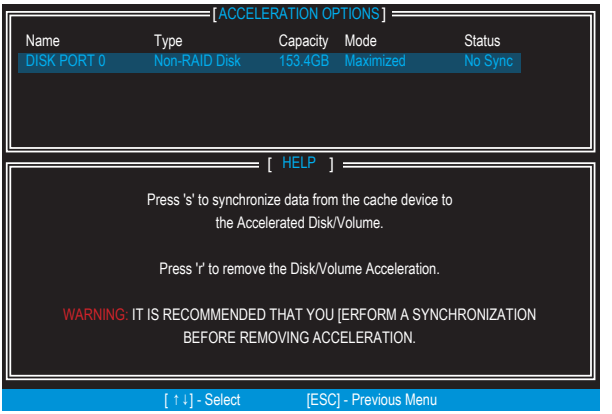

3. Press <S> to synchronize data.

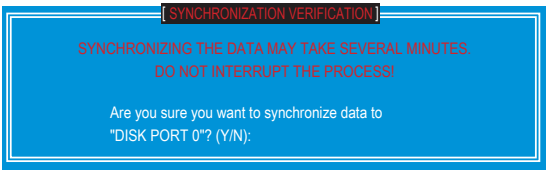

4. When prompted, press <Y> to confirm.

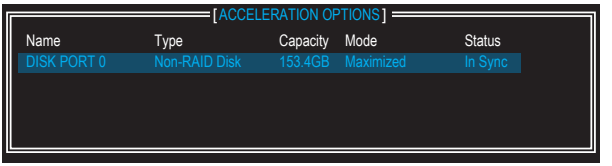

5. Once synchronization is complete, the status will change to In Sync.